RENOVATIONS TO THE

FUTURE EXETER TOWN HALL

742 TEN ROD RD, EXETER, RI, 02822

LOCUS MAP

BREWSTER THORNTON GROUP ARCHITECTS LLP

PRIME/ARCHITECT

BREWSTER THORNTON GROUP ARCHITECTS, LLP

317 IRON HORSE WAY, SUITE 202
PROVIDENCE, RI 02908

401 . 861 . 1600
BREWSTERTHORNTON.COM

M.E.P ENGINEER

ZAINO & ASSOCIATES

183 PROVIDENCE-NEW LONDON TURNPIKE
NORTH STONINGTON, CT 06359
860 . 535 . 9337
FZA-INC.COM

PROJECT NAME
FUTURE EXETER TOWN HALL

PROJECT ISSUE
BID DOCUMENTS
8/31/2026

PROJECT NUMBER
BTGA# 2605

GENERAL LEGEND

- BATT INSULATION
- BRICK
- CONCRETE
- CONCRETE BLOCK
- CULTURED STONE
- DISTURBED EARTH
- UNDISTURBED EARTH
- ENGINEERED WOOD (MDF, HDF, ETC.)
- GLASS, SPECIALTY
- GLASS, VERTICAL SURFACE
- GYPSUM WALLBOARD
- MARBLE/ GRANITE
- PLASTIC/PVC
- PLYWOOD
- RIGID INSULATION
- RUBBLE
- ASPHALT SHINGLES
- STEEL/METAL
- WOOD SHINGLES
- WOOD

DISCLAIMER: HATCH PATTERN SCALE ADJUSTS BY DRAWING SCALE. SEE OTHER DESIGN DISCIPLINES FOR ADDITIONAL LEGEND & SCHEDULE INFORMATION.

- # / A# — EXTERIOR ELEVATION
- # / A# — INTERIOR ELEVATION
- # / A# — SECTION
- # / A# — DETAIL
- # / A# — DETAIL KEY
- # / A# — DETAIL CALLOUT
- NAME / EL. ELEVATION — BENCHMARK ELEVATION
- SPOT ELEVATION
- NORTH — PROJECT NORTH (DASHED INDICATES TRUE NORTH)
- # — COLUMN GRID LINE NEW CONSTRUCTION
- REVISION CLOUD
- L.O.C. — LIMITS OF CONSTRUCTION
- ROOM NAME / ## — ROOM NAME AND MARK
- #### — DOOR MARK
- X — WALL TYPE
- X — WINDOW TYPE
- ## — KEY NOTE
- EXISTING PARTITION EXISTING CONSTRUCTION
- NEW PARTITION
- # — REVISION
- ## — PHOTO SYMBOL
- X — ACCESSORY/ FURNITURE / SPECIALTY EQUIPMENT MARK

COMMON ABBREVIATIONS

(USE OF PUNCTUATION IS OPTIONAL)

ABV	ABOVE
A/C	AIR CONDITION
ACC.	ACCESS(IBLE)
ACT	ACOUSTICAL CEILING TILE
ADA	AMERICANS WITH DISABILITY ACT
ADDL	ADDITIONAL
ADJ.	ADJUSTABLE (OR) ADJACENT
A/E	ARCHITECT/ENGINEER
A.S.F	ABOVE SUBFLOOR
A.F.	ABOVE FLOOR
A.F.F.	ABOVE FINISH FLOOR
AHJ	AUTHORITY HAVING JURISDICTION
AL./ALUM.	ALUMINUM
ALT.	ALTERNATE
ANOD.	ANODIZED
ARCH.	ARCHITECT(URAL)
A.P.	ACCESS PANEL
APP.	APPROXIMATE
APT	APARTMENT
APPROX.	APPROXIMATE
ASI	ARCHITECT'S SUPPLEMENTAL INSTRUCTION
AUTO.	AUTOMATIC
AUX.	AUXILIARY
BAS	BUILDING AUTOMATION SYSTEM
BD	BOARD
BDRM	BEDROOM
BFE	BOTTOM OF FROST ELEVATION
BITUM.	BITUMINOUS
BLDG	BUILDING
BLW	BELOW
BSMT	BASEMENT
BOTT.	BOTTOM
B.O.F	BOTTOM OF FOOTING
B.O.	BLOW OFF VENT
BLKG	BLOCKING
BIT.	BITUMEN OR BITUMENOUS
BLUEBD	BLUEBOARD (VENEER PLASTER BASE)
BRK	BRICK
BRZ	BRONZE
BTWN	BETWEEN
CAB.	CABINET
C.F.M.F.	COLD-FORMED METAL FRAMING
CG	COLUMN GRID
C.L.	CENTER LINE
CLL	CONTRACT LIMIT LINE
CLO	CLOSET
CLG	CEILING
CLR	CLEAR(ANCE)
C.J.	CONTROL JOINT
CMU	CONCRETE MASONRY UNIT
CO	CASED OPENING
COL.	COLUMN
COMP.	COMPRESS(ED), (ION). (IBLE)
CONC.	CONCRETE
CONST.	CONSTRUCTION
CONT.	CONTINU(E), (OUS)
COORD.	COORDINATE
CPT	CARPET
CPR	COPPER
C.T.	CERAMIC TILE
C.U.H.	CABINET UNIT HEATER
DBL	DOUBLE
DEMO	DEMO(LISH), (LITION)
DEG	DEGREES
DET.	DETAIL
D.F.	DRINKING FOUNTAIN
DH	DOUBLE HUNG
DIA.	DIAMETER
DIAG.	DIAGONAL
DIM.	DIMENSION
DISP.	DISPOSE
DN	DOWN
DR	DOOR
DS	DOWNSPOUT
DTL	DETAIL
DWG	DRAWING
DWGS	DRAWINGS
DX	DUPLEX
EA.	EACH
EL.	ELEVATION
ELEC.	ELECTRIC(AL)
ELEV.	ELEVATOR
EMER.	EMERGENCY
EMS	EMERGENCY MANAGEMENT SYSTEM
E.J.	EXPANSION JOINT
EQ	EQUAL
EQUIP	EQUIPMENT
ETR	EXISTING TO REMAIN
EV	EXHAUST VENT
EX.	EXISTING
EXIST.	EXISTING
EXG	EXISTING
EXT.	EXTERIOR
F.A.	FIRE ALARM
F.A.R.	FLOOR AREA RATIO
F.C.U.	FAN COIL UNIT
F.D.	FLOOR DRAIN
F.E.	FIRE EXTINGUISHER
FEC	FIRE EXTINGUISHER CABINET
FF&E	FURNITURE, FIXTURE, AND EQUIPMENT
FGL	FIBERGLASS
FIN.	FINISH
FIN.CLG	FINISH CEILING
FIN.FLR	FINISH FLOOR
FIN.SCH	FINISH SCHEDULE
FIXT.	FIXTURE
FLR.	FLOOR
FLUOR.	FLUORESCENT
FND.	FOUNDATION
F.O.	FACE OF
F.P.	FIRE PROTECTION
F.RATING	FIRE RATING
FR	FIRE RETARDANT
FRP	FIBERGLASS REINFORCED PLASTIC
FT	FEET
FTG	FOOTING
FURN.	FURNITURE
GA	GAGE/GAUGE
GALV	GALVANIZED
GB	GRAB BAR
GL	GLASS
GLAM	GLUE LAMINATED BEAM
GLZ	GLAZING
GWB	GYPSUM BOARD
HC	HANDICAP
HDF	HIGH DENSITY FIBERBOARD
HM	HOLLOW METAL
HDW	HARDWARE
HRW	HARDWARE
HOR.	HORIZONTAL
HR	HOUR
HT	HEIGHT
IN.	INCHES
INCL.	INCLUDE(D),(ING)
INFO.	INFORMATION
INSUL.	INSULATION
INT.	INTERIOR
J.C.	JANITOR'S CLOSET
J-BOX	JUNCTON BOX
JT	JOINT
K.B.	KNOX BOX
KIT.	KITCHEN
LAB.	LABORATORY
LAV.	LAVATORY
LB	POUND(S)
LCC	SEE Z.C.C.
L.E.D.	LIGHT EMITTING DIODE
LF	LIGHT FIXTURE
L.H.	LEFT HAND
LIB.	LIBRARY
LIN	LINOLEUM
LKR	LOCKER
LVL	LAMINATED VENEER LUMBER
LOC.	LOCATION
LVR	LOUVER
LVT	LUXURY VINYL TILE
MACH.	MACHINE
MAS.	MASONRY
MAT.	MATERIAL
MAX.	MAXIMUM
MCT	MARMOLEUM COMPOSITION TILE
MECH.	MECHANICAL
MED.	MEDIUM
MEMB	MEMBRANE
MDF	MEDIUM DENSITY FIBERBOARD
MIL	MILLIMETER
MIN.	MINIMUM
MISC.	MISCELLANEOUS
M.O.	MASONRY OPENING
M.R.	MOISTURE RESISTANT
MTL	METAL
N.A.	NOT APPLICABLE
NAT.	NATURAL
N.C.	NOISE CRITERIA
N.I.C.	NOT IN CONTRACT
NKL	NICKEL
NOM.	NOMINAL
NO	NUMBER
NR	NOT RATED
N.R.C.	NOISE REDUCTION COEFFICIENT
N.T.S.	NOT TO SCALE
O.C.	ON CENTER
O.H.	OPPOSITE HAND
OPNG	OPENING
OPP	OPPOSITE
ORIG.	ORIGINAL
OHD	OVERHEAD
OZ.	OUNCE
PCC	PRE-CAST CONCRETE
PERP	PERPENDICULAR
PL	PLATE
PLAM	PLASTIC LAMINATE
PNL	PANEL
PNT	PAINT
PPL	PEOPLE
PTD	PAINTED
PR	PAIR
PREP	PREPARATION
P.T.	PRESSURE TREATED
PTN	PARTITION
PWD	PLYWOOD
P.V.	PLUMBING VENT
Q.T.	QUARRY TILE
R#	RADIUS
R	RISER
R.B.	RESILENT BASE
RCP	REFLECTED CEILING PLAN
R&D	REMOVE & DISPOSE
R.D.	ROOF DRAIN
RE:	REFER TO
REF.	REFER
REFR	REFRIGERATOR
REQ.	REQUIRE(D)
RES.	RESILIENT
REV.	REVISION
R.H.	RIGHT HAND
RM	ROOM
R.O.	ROUGH OPENING
RWB	RUBBER WALL BASE
SCHED.	SCHEDULE
SD	SIDE
SECT.	SECTION
SF	SQUARE FEET
SF	SUB FLOOR
S.GASKET	SMOKE GASKET
SGL	SAFETY GLASS
SHT	SHEET
SHTH	SHEATHING
SIM.	SIMILAR
SPEC.	SPEC (-IFIED) (-IFICATION)
SRL	SUBMITTAL REVIEW LETTER
SQ.	SQUARE
S.S.	STAINLESS STEEL
S.S.M.	SOLID SURFACE MATERIAL
STC	SOUND TRANSMISSION COEFFICIENT
STD	STANDARD
STOR.	STORAGE
STL	STEEL
STRUCT.	STRUCTURAL
SUSP.	SUSPEND(ED)
SYS.	SYSTEM
T	TREAD
T&G	TONGUE AND GROOVE
TEL.	TELEPHONE
TEMP	TEMPORARY
TGL	TEMPERED GLASS
THK	THICK(NESS)
THRESH	THRESHOLD
T.O.	TOP OF
T.O.F.	TOP OF FOOTING
T.O.S.	TOP OF SHELF
T.O.W.	TOP OF WALL
TS	TUBE STEEL
TSTAT	THERMOSTAT
TYP.	TYPICAL
TZ	TERRAZZO
U.H.	UNIT HEATER
U.N.O.	UNLESS NOTED OTHERWISE
V.A.T.	VINYL ASBESTOS TILE
VCT	VINYL COMPOSITION TILE
VERT.	VERTICAL
V.I.F.	VERIFY IN FIELD
V.R.	VAPOR RETARDER
W/	WITH
W.C.	WATER CLOSET
WD	WOOD
WDW	WINDOW
WSU	WATERPROOF SHINGLE UNDERLAYMENT
WWF	WELDED WIRE FABRIC
Z.C.C.	ZINC COATED COPPER
@	AT
&	AND

GENERAL NOTES

1. ALL WORK SHALL CONFORM TO ALL APPLICABLE CODES AND REGULATIONS IN EFFECT AT THE PROJECT SITE.
2. DO NOT SCALE DRAWINGS. FIELD VERIFY ALL DIMENSIONS.
3. THE CONTRACTOR SHALL REPORT ANY AND ALL DISCREPANCIES TO THE ARCHITECT FOR CLARIFICATION BEFORE PROCEEDING.
4. ALL DIMENSIONS OF NEW WORK ARE TO THE FACE OF CONCRETE AND MASONRY, AND THE CENTER OF METAL STUDS AND FRAME OPENINGS U.N.O.
5. DIMENSIONS NOTED TO EXISTING PLANES SHALL REFER TO THE FINISHED SURFACE OF THE EXISTING WALL, FLOOR, OR CEILING PLANE, UNLESS NOTED OTHERWISE.
6. ALL ITEMS OF WORK ARE TO BE NEW UNLESS NOTED AS EXISTING.
7. CONTRACTOR SHALL VERIFY ALL DOOR AND WINDOW DIMENSIONS IN FIELD BEFORE PURCHASE.
8. TYPICAL CONSTRUCTION IS INDICATED THROUGHOUT THE PROJECT. REPEATED SIMILAR GRAPHIC REPRESENTATION IS SUFFICIENT. NOTE AT EACH OCCURRENCE IS NOT REQUIRED.
9. ALL ITEMS DETAILED IN SECTION ARE CONTINUOUS UNLESS NOTED OTHERWISE.
10. FASTENERS, ADHESIVES AND OTHER SYSTEM COMPONENTS TYPICALLY REQUIRED ARE NOT CONSISTENTLY NOTED OR DETAILED. ONLY UNIQUE CONDITIONS ARE ILLUSTRATED. PROVIDE ALL ITEMS REQUIRED TO SAFELY SECURE, ATTACH OR STABILIZE ALL WORK AS RECOMMENDED BY IT'S MANUFACTURER, AS REQUIRED BY CODE OR NECESSARY FOR THE ASSEMBLY'S PROPER PERFORMANCE WHETHER OR NOT DETAILED.
11. ALL DRAWINGS AND SPECIFICATIONS ARE COMPLIMENTARY AND MUST BE USED AS A SET FOR COMPLETE CONSTRUCTION INFORMATION.
12. IT SHALL BE THE DUTY OF THE CONTRACTOR TO REQUEST FROM THE ARCHITECT ALL NECESSARY INTERPRETATION OF THE CONTRACT DOCUMENTS.
13. DRAWINGS ARE FOR ILLUSTRATIVE PURPOSES ONLY AND MAY NOT SHOW ALL DEMOLITION WORK REQUIRED TO COMPLETE THE CONTRACT WORK.
14. REFER TO PROJECT SPECIFICATIONS FOR ADDITIONAL INFORMATION.
15. DRAWINGS INDICATE APPROXIMATE LOCATION OF FIELD CONDITIONS. VERIFY IN FIELD.
16. DRAWINGS INDICATE SCOPE OF WORK. ACTUAL EXTENT OF WORK TO BE DETERMINED BY FIELD OBSERVATION.
17. DIMENSIONS AND ELEVATIONS INDICATED ON THE DRAWINGS IN REFERENCE TO EXISTING STRUCTURES ARE THE BEST AVAILABLE DATA OBTAINABLE BUT ARE NOT GUARANTEED BY THE OWNER AND THE OWNER WILL NOT BE RESPONSIBLE FOR THEIR ACCURACY. THE CONTRACTOR SHALL FIELD CHECK AND VERIFY ALL DIMENSIONS, GRADES, LINES, LEVELS, OR OTHER CONDITIONS OF LIMITATIONS AT THE SITE TO AVOID CONSTRUCTION ERRORS. IF ANY WORK IS PERFORMED BY THE CONTRACTOR OR ANY OF HIS SUB-CONTRACTORS PRIOR TO ADEQUATE VERIFICATION OF APPLICABLE DATA, ANY RESULTANT EXTRA COST FOR ADJUSTMENT OF WORK AS REQUIRED TO CONFORM TO EXISTING LIMITATIONS SHALL BE ASSUMED BY THE CONTRACTOR WITHOUT REIMBURSEMENT OR COMPENSATION BY THE OWNER.
18. OMISSION FROM THE DRAWINGS AND SPECIFICATIONS OF ITEMS WHICH OBVIOUSLY ARE NEEDED TO PROPERLY PERFORM THE WORK, SUCH AS ATTACHMENTS, BOLTS, HANGERS, ETC., SHALL NOT RELIEVE THE CONTRACTOR FROM FURNISHING AND INSTALLING THEM.
19. IT IS INTENDED THAT ALL DIMENSIONS AND FIGURES ON THE DRAWINGS SHALL AGREE. THE CONTRACTOR SHALL CONFIRM THEM BEFORE STARTING THE WORK AND SHALL REPORT IN WRITING ALL DISCREPANCIES TO THE ARCHITECT FOR ADJUSTMENT.

DRAWING LIST

SHEET	SHEET NAME
G000	COVER SHEET
G001	SHEET LIST, GENERAL NOTES, LEGEND, AND ABBREVIATIONS
G002	CODE SUMMARY AND EGRESS PLAN
G003	SPECIFICATIONS
G004	SPECIFICATIONS
G005	SPECIFICATIONS
G006	SPECIFICATIONS
D100	DEMOLITION PLAN
A100	FLOOR PLAN AND WALL TYPES
A101	REFLECTED CEILING PLAN
A600	DOORS AND WINDOWS
A700	FINISH FLOOR PLAN
A701	INTERIOR ELEVATIONS
A702	INTERIOR ELEVATIONS
A703	INTERIOR ELEVATIONS
A704	INTERIOR ELEVATIONS
A800	MILLWORK
A801	MILLWORK & SIGNAGE
M000	MECHANICAL LEGEND & SYMBOLS
MD100	MECHANICAL DEMOLITION PLAN
M100	MECHANICAL FLOOR PLAN
M300	MECHANICAL DETAILS
M301	MECHANICAL DETAILS
M400	MECHANICAL SPECIFICATIONS
E100	ELECTRICAL LEGEND AND SYMBOLS
ED200	ELECTRICAL DEMO FLOOR PLAN
E300	ELECTRICAL POWER FIRST FLOOR PLAN
E301	ELECTRICAL LIGHTING PLAN
E302	ELECTRICAL LIFE SAFETY PLAN
E400	FIRE ALARM RISER DIAGRAM
E500	ELECTRICAL RISER DIAGRAM AND DETAILS
E600	ELECTRICAL DETAILS
E700	ELECTRICAL SPECIFICATIONS
P000	PLUMBING LEGEND, SYMBOLS, SCHEDULE & DETAILS
PD100	PLUMBING DEMO PLAN
P100	PLUMBING FIRST FLOOR PLAN
P300	PLUMBING DETAILS
P400	PLUMBING SPECIFICATIONS

RENOVATIONS TO THE
EXETER TOWN HALL
742 TEN ROD RD, EXETER, RI, 02822

BREWSTER THORNTON GROUP ARCHITECTS LLP
317 Iron Horse Way, Suite 202
Providence, RI 02908
401.861.1600
brewsterthornton.com

JOB NO.	DATE
2605	08/31/26

ISSUE : **BID DOCUMENTS**

NO.	REVISION DESCRIPTION	DATE

SHEET TITLE
SHEET LIST, GENERAL NOTES, LEGEND, AND ABBREVIATIONS

SHEET
G001

8/31/2026 12:24:51 PM

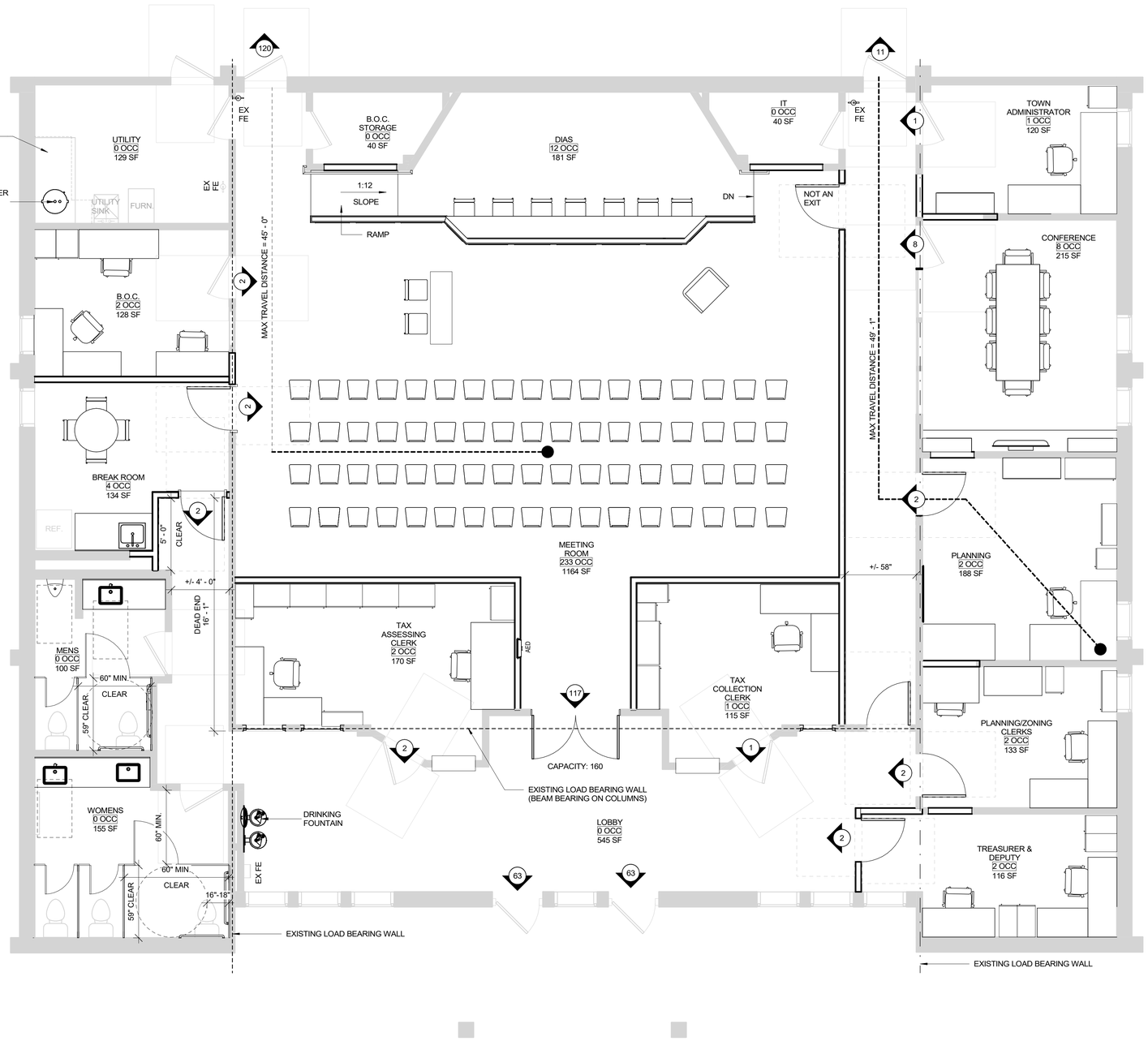

1 G002 EGRESS PLAN
Scale: 1/4" = 1'-0"

NOTE: TYPICAL DOOR CAPACITY IS 160 U.N.O.

CODE SUMMARY

APPLICABLE CODES

CODE	EDITION	AMENDMENTS	EFFECTIVE DATE
International Building Code (IBC)	2021	RI Amendments	12/01/2025
NFPA Fire Code (NFPA 1)	2021	RI Amendments	03/01/2026
NFPA Life Safety Code (NFPA 101)	2021	RI Amendments	03/01/2026
ADA Standard for Accessible Design	2010	None	01/01/2010
International Energy Conservation Code (IECC)	2024	None	12/01/2025
International Existing Building Code (IEBC)	2021	RI Amendments	12/01/2025
Town of Exeter Zoning Ordinance	2026	Tecnical Revisions	04/23/2026
International Plumbing Code (IPC)	2021	RI Ammendments	12/01/2025

BUILDING TYPE

Single story municipal office building: 4,380 SF
Mixed Use / Non-Separated

ZONING INFORMATION

Zone: RU-4 Neighborhood: C2
No exterior changes are proposed as part of this project

OCCUPANCY CLASSIFICATION AND USE — SBC Chapter 3

Use/Occupancy	Business (B) and Assembly (A3)

OCCUPANT LOADING — SBC Chapter 10

	REQUIRED	ACTUAL	REFERENCE
Business (B)	150 SF gross/person	24	SBC (Table 1004.5) & NFPA 1 (Table 14.8.1.2)
Assembly (Concentrated- Non-fixed Chairs)	7 SF net/person	233	SBC (Table 1004.5) & NFPA 1 (Table 14.8.1.2)
Assembly (Stages & Platforms)	15 SF net/person	12	SBC (Table 1004.5) & NFPA 1 (Table 14.8.1.2)

HEIGHT & AREA REQUIREMENTS — SBC Chapter 5

Use Group	Max Height	Provided Height	Max number of stories	Provided Stories	Max Area	Provided Area
B	N/A	ETR	N/A	ETR	N/A	ETR
A-3	N/A	ETR	N/A	ETR	N/A	ETR
	* Zoning/SBC Table 504.3		* Zoning/SBC Table 504.4		* Zoning/sbc Table 506.2	

TYPES OF CONSTRUCTION — SBC Chapter 6

Construction Type:	Type V-B	Existing Unprotected Wood Frame Construction: 0 HR Rating for all elements	SBC Table 601 RILSC Table A8.2.1.2

MEANS OF EGRESS — SBC Chapter 10

Egress Widths	REQUIRED	PROVIDED	REFERENCE
Corridors	36" (for occupant load of less than 50)	58"	SBC 1020
Doors	32" minimum clear width	36" Doors	SBC 1010
Minimum Number of Exits	**REQUIRED**	**PROVIDED**	**REFERENCE**
	Occupant load of greater than 50 requires minimum of 2 exits per space.	2	SBC 1006.2
Travel Requirements	**REQUIRED**	**PROVIDED**	**REFERENCE**
Common Path - Business	MAX 100 FT	0 FT	SBC 1030.8
Common Path - Assembly	MAX 75 FT	0 FT	SBC 1006.2.1
Dead End - Business	MAX 20 FT	10 FT	SBC 1020.5
Dead End - Assembly	MAX 20 FT	0 FT	
Total Travel - Business	MAX 200 FT	49'-1"	SBC 1017
Total Travel - Assembly	MAX 200 FT	49'-1"	

FIRE & SMOKE PROTECTION

Rated Assemblies	REQUIRED	PROVIDED	REFERENCE
Corridor Protection	0 HR	0 HR	SBC Table 1020.2 RILSC 38.3.6.1

Component	SBC REQ.	FSC REQ.		
Structural Frame	0 HR	0 HR	Proposed construction meets the minimum fire resistance requirements.	SBC Table 601 RILSC 8.2.1.2, NFPA 220
Bearing Walls (Exterior)	0 HR	0 HR		
Bearing Walls (Interior)	0 HR	0 HR		
Nonbearing Walls	0 HR	0 HR		
Floor	0 HR	0 HR		
Roof	0 HR	0 HR		
Vertical Opening Shafts < 4 Stories	N/A	1 HR	N/A	SBC 1023 RILSC 8.6.4

SPRINKLERS

None. Not required: 12.3.3.5.1 Does not apply to occupancies less than 300 not meeting the definite of a nightclub.

FIRE EXSTINGUISHERS

	PROVIDED	REFERENCE
Required: Not to exceed 75' diameter in coverage.	60'	NFPA 10

PLUMBING CALCULATIONS — SBC Chapter 29

	REQUIRED	PROVIDED	REFERENCE
Water Closets	MALE: 1 FEMALE: 2	MALE: 2 FEMALE: 3	IPC Table 2902.1
Urinals	0	1	
Lavatories	MALE: 1 FEMALE: 1	MALE: 1 FEMALE: 2	
Drinking Fountains	1	1	
Mop Sink	1	1	

EGRESS LEGEND

1 HR SEPARATION		**EGRESS PATH**	
ROOM DESIGNATION	ROOM NAME / OCCUPANTS / SQUARE FOOTAGE	**CAPACITY OF EGRESS OPENING**	CAPACITY = ##
EGRESS ANNOTATION (DIRECTION + # OCC.)	##	**FIRE EXTINGUISHER**	F.E.C. F.E.

RENOVATIONS TO THE EXETER TOWN HALL

742 TEN ROD RD, EXETER, RI, 02822

BREWSTER THORNTON GROUP ARCHITECTS LLP
317 Iron Horse Way, Suite 202
Providence, RI 02908
401.861.1600
brewsterthornton.com

JOB NO. 2605
DATE 08/31/26
ISSUE : BID DOCUMENTS

NO.	REVISION DESCRIPTION	DATE

SHEET TITLE
CODE SUMMARY AND EGRESS PLAN

SHEET
G002

8/31/2026 12:24:52 PM

DIVISION 00 - GENERAL CONDITIONS

Overview
1. See book specficiations for general conditions, bid forms, etc.

DIVISION 01 - GENERAL REQUIREMENTS

Section 01 1000 Summary
1. This project consists of an interior renovation to a Town-owned property intended for office use. The building will eventually become the new Town Hall. The building is
unoccupied with the exception of select voting times noted below. No exterior work has been included as part of this project with the exception of the removal of indicated signage/artwork.
2. Due to funding limitations, the construction must be 100% complete and billed for by December 31, 2026. Work can begin immediately upon award.
3. All local permit fees will be waived by the Town. The RI ADA fee is state-mandated at a 0.1% levy on all building permits. The contractor is responsible for this fee.
4. The Board of Canvasers will be conducting early voting in the main Meeting Room area between October 14 and November 2, 2026 from 8:30am to 4:00pm. The contractor must keep this space open and safe to the public during those times.
5. Storage unit on site may be used by contractor pending space availibility.

Section 01 2000 Price and Payment Procedures
1. The tentatively awarded bidder must submit a Schedule of Values for approval. It must be revised to include approved change order work with each application for payment.
2. Applications for Payment must utilize the AIA format.
3. Applications for Payment must include partial releases of lien from major subcontractors and vendors.
4. Proof of stored materials must be provided when billing for these products.
5. Final Payment will not be released until all work is complete including submission and approval of all closeout documents. If this project is not completed by 12/31/26, the contractor may be subject to financial reimbursement of lost funds or incomplete work.

Section 01 2100 Allowances – None

Section 01 2200 Unit Prices - None

Section 01 2300 Alternates
1. See Bid Form for a breakdown and description of alternates.

Section 01 2500 Substitution Procedures
1. Substitutions for Cause: Submit requests for substitution immediately on discovery of need for change, but not later than 15 days prior to time required for preparation and review of related submittals. Architect will consider Contractor's request for substitution when the following conditions are satisfied. If the following conditions are not satisfied, Architect will return requests without action, except to record noncompliance with these requirements:
   a. Requested substitution is consistent with the Contract Documents and will produce indicated results.
   b. Substitution request is fully documented and properly submitted.
   c. Requested substitution will not adversely affect Contractor's construction schedule.
   d. Requested substitution has received necessary approvals of authorities having jurisdiction.
   e. Requested substitution is compatible with other portions of the Work.
   f. Requested substitution has been coordinated with other portions of the Work.
   g. Requested substitution provides specified warranty.
   h. If requested substitution involves more than one contractor, requested substitution has been coordinated with other portions of the Work, is uniform and consistent, is compatible with other products, and is acceptable to all contractors involved.
2. Substitutions for Convenience: Must be submitted during the bidding question period.

Section 01 3000 Administration Requirements
1. The Contractor must cooperate with the Owner and Design Team in allocation of mobilization areas, field office locations, construction access, traffic, and parking facilities.
2. A Owner-provided storage container is located on site storing existing furniture and may be used by the contractor for storing materials, as space allows.
3. During construction, coordinate the use of the site and facilities through the Owner and Design Team.

Section 01 3005 Prevailing Wage Rates
1. All work must be preformed using prevailing wage rate current to the time of bid submission, per the State of Rhode Island regulations and requirements.

Section 01 3100 Project Management and Coordination
1. Subcontract List: Prepare a written summary identifying individuals or firms proposed for each portion of the Work, including those who are to furnish products or equipment fabricated to a special design, including their name, address, telephone number, and email address.
2. Key Personnel Names: Submit a list of key personnel assignments, including superintendent and other personnel in attendance at Project site. Identify individuals and their duties and responsibilities; list addresses and cellular telephone numbers and e-mail addresses. Provide names, addresses, and telephone numbers of individuals assigned as alternates in the absence of individuals assigned to Project.
3. A RI licensed Construction Superintendent must be present on site during all active construction including all subcontractor work.
4. Questions or clarifications must be submitted to the Architect as a formal Request for Information (RFI) and including the project name, date, name of the General Contractor and applicable Subcontractor, RFI sequential number, specification section and/or drawing number in question, and a suggested resolution, including potential schedule and/or cost implications. Please allow up to five (5) business days for a response from the Design Team. RFI's received after 1pm will be considered as recieved the following working day.

Section 01 4117 Utility Notification
1. Notification required to and by the utiltiy companies is the responsibility of the contractor to complete the scope of work in the time restrictions provided.
2. The Contractor is fully responsible for protection of the utility location markings, wherever these occur, on or off-site.
3. Perform Work in such a manner, and with reasonable precautions taken to avoid damage to utilities under the surface in said areas of work. Immediately notify any known or suspected damage to underground utilities to the owner of such utilities.

Section 01 7000 Contract Closeout
1. The following is a minimum list of items required for Substantial Completion:
   a. Compliance Certificates.
   b. Warranties and Guarantees.
   c. Bonds.
   d. Certificates and Affidavits.
   e. Operating and Maintenance Manuals.
   f. Project Record documents.
   g. Extra materials and samples.
   h. Certificate of Occupancy.
   i. Tools and spare parts, as specified.
   j. Final Survey
   k. Requirements for insurance "change-over".
   l. Change over of locks and transmit keys.
   m. Complete start-up testing of all equipment and verification.
   n. Equipment operating instructions of Owner's personnel.
   o. Final cleaning.
1. The following is a list of items required for Final Completion:
   a. Completion of all punch list items.
   b. Completion of Substantial Completion requirements.
   c. Submission of final payment requests and releases.
   d. Submission of Consent of Surety.
2. Complete the following cleaning operations before requesting inspection for certification of Substantial Completion for entire Project or for a portion of Project:
   a. Clean Project site, yard, and grounds, in areas disturbed by construction activities, including landscape development areas, of rubbish, waste material, litter, and other foreign substances.
   b. Sweep paved areas broom clean. Remove petrochemical spills, stains, and other foreign deposits.
   c. Remove tools, construction equipment, machinery, and surplus material from Project site.
   d. Remove snow and ice to provide safe access to building.
   e. Clean exposed exterior and interior hard-surfaced finishes to a dirt-free condition, free of stains, films, and similar foreign substances. Avoid disturbing natural weathering of exterior surfaces. Restore reflective surfaces to their original condition.
   f. Remove debris and surface dust from limited access spaces, including roofs, plenums, shafts, trenches, equipment vaults, manholes, attics, and similar spaces.
   g. Sweep concrete floors broom clean in unoccupied spaces.
   h. Vacuum carpet and similar soft surfaces, removing debris and excess nap; shampoo if visible soil or stains remain.
   i. Clean transparent materials, including mirrors and glass in doors and windows.
   j. Remove glazing compounds and other noticeable, vision-obscuring materials. Replace chipped or broken glass and other damaged transparent materials.
   k. Polish mirrors and glass, taking care not to scratch surfaces.
   l. Remove labels that are not permanent.
   m. Touch up and otherwise repair and restore marred, exposed finishes and surfaces. Replace finishes and surfaces that cannot be satisfactorily repaired or restored or that already show evidence of repair or restoration.
   n. Do not paint over "UL" and similar labels, including mechanical and electrical nameplates.
   o. Wipe surfaces of mechanical and electrical equipment, elevator equipment, and similar equipment. Remove excess lubrication, paint and mortar droppings, and other foreign substances.
   p. Replace parts subject to unusual operating conditions.
   q. Clean plumbing fixtures to a sanitary condition, free of stains, including stains resulting from water exposure.
   r. Replace disposable air filters and clean permanent air filters. Clean exposed surfaces of diffusers, registers, and grills.
   s. Clean ducts, blowers, and coils if units were operated without filters during construction.
   t. Clean light fixtures, lamps, globes, and reflectors to function with full efficiency. Replace burned-out bulbs, and those noticeably dimmed by hours of use, and defective and noisy starters in fluorescent and mercury vapor fixtures to comply with requirements for new fixtures.
3. Final Inspection: In conjunction with the final payment procedure of the Supplementary Conditions, a final inspection of the entire project will be conducted, at a mutually agreeable time, by the Owner, Contractor, and Architect.

Section 01 7300 Execution
1. In-Place Materials: Use materials for patching identical to in-place materials. For exposed surfaces, use materials that visually match in-place adjacent surfaces to the fullest extent possible.
2. Existing Conditions: The existence and location of underground and other utilities and construction indicated as existing are not guaranteed. Before beginning sitework, investigate and verify the existence and location of underground utilities, mechanical and electrical systems, and other construction affecting the Work.
3. Examination and Acceptance of Conditions: Before proceeding with each component of the Work, examine substrates, areas, and conditions, with Installer or Applicator present where indicated, for compliance with requirements for installation tolerances and other conditions affecting performance. Record observations.
4. Field Measurements: Take field measurements as required to fit the Work properly. Recheck measurements before installing each product. Where portions of the Work are indicated to fit to other construction, verify dimensions of other construction by field measurements before fabrication. Coordinate fabrication schedule with construction progress to avoid delaying the Work.
5. Space Requirements: Verify space requirements and dimensions of items shown diagrammatically on Drawings.
6. Review of Contract Documents and Field Conditions: Immediately on discovery of the need for clarification of the Contract Documents caused by differing field conditions outside the control of Contractor, submit a request for information to Architect.
7. Building Lines and Levels: Locate and lay out control lines and levels for structures, building foundations, column grids, and floor levels, including those required for mechanical and electrical work. Transfer survey markings and elevations for use with control lines and levels. Level foundations and piers from two or more locations
8. Record Log: Maintain a log of layout control work. Record deviations from required lines and levels. Include beginning and ending dates and times of surveys, weather conditions, name and duty of each survey party member, and types of instruments and tapes used. Make the log available for reference by Architect.
9. Locate the Work and components of the Work accurately, in correct alignment and elevation, as indicated.
   a. Make vertical work plumb and make horizontal work level.
   b. Where space is limited, install components to maximize space available for maintenance and ease of removal for replacement.
   c. Conceal pipes, ducts, and wiring in finished areas unless otherwise indicated.
   d. Maintain minimum headroom clearance of 96 inches (2440 mm) in occupied spaces and 90 inches (2300 mm) in unoccupied spaces.
10. Comply with manufacturer's written instructions and recommendations for installing products in applications indicated.
11. Install products at the time and under conditions that will ensure the best possible results. Maintain conditions required for product performance until Substantial Completion.
12. Conduct construction operations so no part of the Work is subjected to damaging operations or loading in excess of that expected during normal conditions of occupancy.
13. Sequence the Work and allow adequate clearances to accommodate movement of construction items on site and placement in permanent locations.
14. Tools and Equipment: Where possible, select tools or equipment that minimize production of excessive noise levels.
15. Templates: Obtain and distribute to the parties involved templates for work specified to be factory prepared and field installed. Check Shop Drawings of other portions of the Work to confirm that adequate provisions are made for locating and installing products to comply with indicated requirements.
16. Drawing Coordination: All contractors must reference the interior elevations and other architectural drawings for locations of building systems and materials. Center on walls and spaces unless noted otherwise. When in doubt, request clarification from the Architect before installation.
16. Attachment: Provide blocking and attachment plates and anchors and fasteners of adequate size and number to securely anchor each component in place, accurately located and aligned with other portions of the Work. Where size and type of attachments are not indicated, verify size and type required for load conditions.
   a. Mounting Heights: Where mounting heights are not indicated, mount components at heights directed by Architect.
   b. Allow for building movement, including thermal expansion and contraction.
   c. Coordinate installation of anchorages. Furnish setting drawings, templates, and directions for installing anchorages, including sleeves, concrete inserts, anchor bolts, and items with integral anchors, that are to be embedded in concrete or masonry. Deliver such items to Project site in time for installation.
17. Joints: Make joints of uniform width. Where joint locations in exposed work are not indicated, arrange joints for the best visual effect. Fit exposed connections together to form hairline joints.
Repair or remove and replace damaged, defective, or nonconforming Work.
18. Coordinate construction and operations of the Work with work to be performed by Owner and their independent subcontractors, including installation of plumbing accessories, where indicated.
19. Progress Cleaning: The building must be clean during early voting hours noted. Clean Project site and work areas daily, including common areas. Enforce requirements strictly. Dispose of materials lawfully.
20: Starting and Adjusting: Start equipment and operating components to confirm proper operation. Remove malfunctioning units, replace with new units, and retest. Adjust equipment for proper operation. Adjust operating components for proper operation without binding. Test each piece of equipment to verify proper operation. Test and adjust controls and safeties. Replace damaged and malfunctioning controls and equipment.
21: Protection of Installed Construction: Provide final protection and maintain conditions that ensure installed Work is without damage or deterioration at time of Substantial Completion. Provide protection and ensure that existing items to remain undisturbed by construction are maintained in condition that existed at the commencement of the Work. Comply with manufacturer's written instructions for temperature and relative humidity.

Section 01 7839 Project Record Documents
1. The Contractor is responsible for maintaining a full-size set of project drawings and specifications on site throughout construction (this may be digital or physical copies). Incorpoate new and revised documents and modifications daily. Record all installation that varies from the orginal documentation.
2. Require individual or entity who obtained record data, whether individual or entity is Installer, subcontractor, or similar entity, to provide information for preparation of corresponding marked-up record prints.
3. Provide a digital record copy of all as-built documents to the Architect and Owner prior to final payment.
4. Provide record copies of all approved submittals in digital format to the Architect and Owner prior to final payment.
5. Provide all warranties to the Architect and Owner prior to final payment.
6. Provide all attic stock materials to the Architect and Owner prior to final payment.
7. Provide weekly construction photos (minimum of 50 per week) documenting the construction progress.

DIVISION 02 - DEMOLITION

Section 02 4119 Selective Demolition
1. Demolish building elements as indicated on the demolition drawing, including all associated elements needed to complete the work.
2. Protect adjacent areas and existing construction to remain. Provide dust separation between construction areas and occupied spaces without obstructing egress.
3. Salvage of existing items to be reused or turned over to the Owner.
4. File all necessary notices, oblain all permits and licenses, and pay all governmental taxes, fees, and other costs in connection with the work. Obtain all necessary approvals of all governmental departments having jurisdiction.
5. The Contractor shall take photographs or record a video tape of existing conditions.
6. Removal and recycling/disposal of demolished materials are at the Contractor's expense. Except for those items specifically designated to be turned over to the Owner, all existing removed materials, items, trash, and debris shall become the property of the Contractor and shall be completely removed from the site and legally disposed, recycled, and salvaged at the Contractor's expense. Onsite sale of material is not permitted.
7. The Contractor is responsible for lawful waste removal and dispose per RI State laws.
8. The Contractor is responsible for environmentally-concious waste management including recyling of materials whereever possible.
9. Protection of site structures and features that are designated to remain.
10.Refer to project requirements on drawings for selective demolition. Coordinate activities to prevent damages to adjacent properties during selective demolition.

DIVISION 05 - METALS

Section 05 5213 Pipe and Tube Railings
1. Submittals
   a. Product Data.
   b. Shop Drawings.
   c. Finsh Samples.
2. Quality Assurance
   a. The Contractor is responsible for lawful waste removal and dispose per RI State laws.
   b. The Contractor is responsible for environmentally-concious waste management including recyling of materials whereever possible.
3. Basis of Design:
   a. Global Industries
   b. Granger
   c. Julius Blum & Co.
   d. Approved equal.
4. Painted Steel Handrails and Brackets
   a. Pipe: ASTM A53, Schedule 40.
   b. Diameter: 1-1/2 inches.
   c. Finish: Satin stainless steel.
   d. Handrail height: 34 inches minimum to 38 inches maximum above stair nosings and ramp surfaces.
   e. Clear distance from wall: 1-1/2 inches minimum.
   f. Gripping surface diameter: 1-1/4 inches to 2 inches.
   g. Bracket BOD: Lavi Industries: Model #WB81191522
5. Fabrication:
   a. Fabricate railings true to line and grade.
   b. Form bends smooth and continuous.
   c. Grind exposed welds smooth.
   d. Close ends with welded caps unless otherwise indicated.
   e. Comply with ADA and applicable building code requirements.
6. Installation:
   a. Install plumb, level, rigid, and securely anchored.
   b. Set railings true to alignment without distortion.
   c. Coordinate anchorage with adjacent construction.
   d. Verify substrates and conditions are acceptable before installation.
7. Adjusting and Cleaning
   a. Touch up damaged finishes.
   b. Remove debris and protective coverings.
   c. Clean finished surfaces.
8. Counter Brackets: BOD Iron Supports Standard Front Mounted Countertop L Bracket.

DIVISION 06 - WOOD AND PLASTICS

Section 06 1000 Rough Carpentry
1. References:
   a. American Wood Council (AWC).
   b. PS 20 - American Softwood Lumber Standard.
   c. AWPA Standards for Preservative Treatment.
   d. ICC Evaluation Service Reports for treated wood product
2. Submittals:
   a. Product Data for plywood and dimensional lumber.
   b. Sustainable forestry certifications.
3. Delivery, Storage, and Handling:
   a. Store materials off the ground and protected from moisture.
   b. Protect lumber from weather and construction traffic damage.
4. Dimension lumber:
   a. Lumber: PS 20, SPF or Southern Pine.
   b. Moisture Content: 19 percent maximum for framing lumber.
   c. Grade: No. 2 or better unless indicated otherwise.
5. Pressure-Preservative-Treated Wood:
   a. Comply with AWPA standards.
   b. Preservative: Alkaline Copper Quaternary (ACQ) and Micronized Copper Azole (MCA).
   c. Use treated wood for: Wood in contact with concrete or masonry.
6. Plywood:
   a. Comply with PS 1.
   b. Exposure 1 classification.
   c. Thickness as indicated.
   d. Fire-retardant-treated plywood where indicated.
7. Blocking and Nailers:
   a. Lumber:No. 2 grade minimum.
   b. Plywood Backing: 3/4-inch plywood unless noted otherwise.
8. Fasteners:
   a. Comply with ASTM standards and building code requirements.
   b. Provide hot-dip galvanized or stainless-steel fasteners for:
9. Treated lumber:
   a. Exterior applications.
   b. High-moisture locations including bathrooms.
10. Execution: Verify substrates are properly prepared and dimensions are correct before installation.
11. Installation:
   a. Install framing members plumb, level, and true.
   b. Securely anchor blocking, nailers, and supports.
   c. Coordinate locations of backing required for:
      i. Toilet accessories.
      ii. Handrails.
      iii. Grab bars.
      iv. Millwork/Casework.
      v. Wall-mounted equipment.
      vi. Signage.
      vii Fire extinguishers and cabinets.
   d. Cut and fit carpentry accurately to other construction.
12. Field Quality Control: Replace damaged, warped, split, or improperly installed materials.
13. Protection: Protect installed rough carpentry from moisture and damage until Substantial Completion.

Section 06 4115 Plastic Laminate-Clad Architectural Cabinets
1. References
   a. Architectural Woodwork Institute (AWI): AWI Standards, Section 400, Architectural Casework.
   b. AWI Standards, Section 1600, Plastic Laminate Clad Panels.
   c. ANSI A117.1 – Accessible and Usable Buildings and Facilities.
   d. NEMA LD 3 – High-Pressure Decorative Laminates.
   e. ASTM E84 – Surface Burning Characteristics of Building Materials.
2. Submittals
   a. Product Data:
      i. Plastic laminate.
      ii. Solid surfacing materials.
      iii. Cabinet hardware.
      iv. Adhesives and accessories.
   b. Shop Drawings:
      i. Plans, elevations, sections, and details.
      ii. Cabinet dimensions and configurations.
      iii. Countertop details.
      iv. Hardware locations.
   c. Samples:
      i. plastic laminate color selections.
      ii. Solid surfacing selections.
3. Quality Assurance
   a. Fabricate casework in accordance with AWI Quality Standards.
   b. Provide AWI Premium Grade construction unless noted otherwise.
   c. Fabricator shall have a minimum of five years documented experience manufacturing similar work.
4. Delivery, Storage, and Handling
   a. Deliver materials in manufacturer's original packaging.
   b. Store in enclosed, climate-controlled spaces protected from moisture and damage.
   c. Protect finished surfaces from abrasion and staining.
5. Products
   a. Plastic Laminate Manufacturers
      i. Wilsonart.
      ii. Formica.
      iii. Nevamar.
      iv. Approved equal.
   b. Solid Surfacing Manufacturers
      i. Corian.
      ii. HI-MACS.
      iii. Staron.
      iv. Approved equal.
6. Plastic-Laminate-Clad Casework
   a. Custom and modular cabinets conforming to AWI Section 400, Division 400B, and AWI Section 1600, Division 1600B.
   b. AWI Premium Grade.
   c. Exposed surfaces clad with high-pressure decorative laminate.
   d. Interior surfaces of thermally fused laminate (TFL) or melamine.
   e. Adjustable shelving.
   f. Fully concealed hinges.
   g. ull-extension drawer slides.
   h. Moisture-resistant construction at sink cabinets.
   i. Basis of Design: Wilsonart Studio Teak.
7. Solid-Surface Countertops
   a. Solid acrylic surfacing material.
   b. Basis of Design: Corian Carrara Lino.
   c. Integral backsplashes where indicated.
   d. Seamed in accordance with manufacturer's recommendations.
   e. Exposed edges eased and polished.
   f. Thickness: 1/2-inch minimum unless noted otherwise.
8. Hardware
   a. ADA-compliant pulls and operating hardware.
   b. Pulls: Satin stainless steel finish. Minimum 4-inch pull length.
   c. Hinges: Concealed, self-closing type.
   d. Drawer Slides: Full-extension ball-bearing type.
   e. Shelf Supports:Metal, adjustable type.
   f. Locks: None.
9. Fabrication
   a. Fabricate cabinets square, rigid, and true to dimensions indicated.
   b. Match laminate grain direction on exposed adjacent surfaces.
   c. Finish exposed ends with matching laminate panels.
   d. Provide fillers, scribes, and trim required for complete installation.
   e. Pre-fit components in shop to greatest extent possible.
10. Execution
   a. Verify wall framing, floor substrates, and rough openings are properly prepared and suitable for installation of cabinetry and countertops.
   b. Do not proceed with installation until unsatisfactory conditions have been corrected.
11. Installation
   a. Install cabinets in accordance with AWI Quality Standards and manufacturer's written instructions.
   b. Set cabinets plumb, level, rigid, and securely anchored to supporting construction.
   c. Scribe cabinets and fillers to adjacent surfaces for tight-fitting installations.
   d. Install countertops with closely fitted joints and concealed fastenings.
   e. Coordinate installation of plumbing fixtures, electrical devices, and accessories requiring cabinet integration.
   f. Seal joints at sinks, backsplashes, and wet locations with mildew-resistant sealant.
12. Adjustment and Cleaning
   a. Adjust doors and drawers for smooth operation and proper alignment.
   b. Replace damaged or defective components.
   c. Remove labels, protective coverings, and construction debris.
   d. Clean exposed surfaces in accordance with manufacturer's recommendations.
13. Protection
   a. Protect installed cabinetry and countertops from damage during remainder of construction.
   b. Repair or replace damaged work before Substantial Completion.

RENOVATIONS TO THE
EXETER TOWN HALL
742 TEN ROD RD, EXETER, RI, 02822

BREWSTER THORNTON GROUP ARCHITECTS LLP
317 Iron Horse Way, Suite 202
Providence, RI 02908
401.861.1600
brewsterthornton.com

JOB NO. 2605
DATE 08/31/26

ISSUE : **BID DOCUMENTS**

NO.	REVISION DESCRIPTION	DATE

SHEET TITLE
SPECIFICATIONS

SHEET
G003

8/31/2026 12:24:52 PM

DIVISION 06 - WOOD AND PLASTICS

Section 06 46 00 Wood Trim

1. References
    a. AWI Quality Standards
    b. National Hardwood Lumber Association (NHLA) Standards.
2. Submittals
    a. Product Data: Submit Manufacturer's literature for trim products and accessories.
    b. Shop Drawings: Submit profiles and dimensions for custom trim, if required.
3. Quality Assurance
    a. Comply with AWI standards for paint-grade interior woodwork.
    b. Moisture Content: Maximum 12 percent at time of installation.
4. Delivery, Storage, and Handling
    a. Store materials in enclosed, conditioned spaces protected moisture and damage.
    b. Acclimate wood trim to building conditions for not less than 72 hours before installation.
5. Materials: Paint-Grade Wood Trim: Finger-jointed pine or MDF suitable for painted finish. Free of defects that would impair appearence or performance.
6. Manufacturers:
    a. WindsorOne Primed Finger-Jointed Pine
    b. Metrie Primed MDF Mouldings
    c. Equal products by approved manufacturers.
7. Trim Profiles: Match existing unless noted otherwise. Provide classic panel molding at wainscotting detailing.
8. Accessories:
    a. Fasteners: Finish nails or concealed fastening system for suitable for substrate.
    b. Adhesives: Low-VOC construction adhesive recommended by trim manufacturer.
9. Fabrication: Fabricate trim to profiles indicated. Cope interior corners where applicable. Miter exposed outside corners. Factory-prime all exposed surfaces. Verify substrates are plumb, true, and ready to recieve trim. Do not begin installation until unsatisfactory conditions have been corrected.
10. Installation: Install trim levfel, plumb, and securely fastened. Fit joints tightly and scribe trim to irregular surfaces where required. Set fasteners for filing and finishing. Align trim accuratly at doors, windows, and other openings.
11. Protect installed trim from damage until Substantial Completion.
    b. Replace damaged sealants at no additional cost to Owner.

DIVISION 07 - THERMAL AND MOISTURE PROTECTION

Section 07 9200 Joint Sealant

1. References:
    a. ASTM C920 – Elastomeric Joint Sealants.
    b. ASTM C834 – Latex Sealants.
    c. ASTM C1193 – Guide for Use of Joint Sealants.
    d. ASTM C1330 – Cylindrical Sealant Backing for Use with Cold Liquid-Applied Sealants.
    e. SWRI Sealant and Waterproofing Guide Specifications.
    f. ANSI A108.01 – Installation Standards for Tile Work.
2. General:
    a. Provide sealants compatible with adjoining materials.
    b. Provide sealant systems capable of performing under anticipated movement and environmental conditions.
    c. Control and expansion joints: Minimum ±50 percent movement capability where required.
3. Submittals:
    a. Product Data for each sealant type, primer, and accessory, including manufacturer's installation instructions and VOC compliance.
    b. Samples: Manufacturer's color charts.
    c. Warranty documentation.
4. Quality Assurance:
    a. Manufacturer regularly engaged in production of joint sealants for minimum five years.
    b. Experienced installer specializing in sealant applications.
5. Delivery and Handling:
    a. Deliver products in original unopened containers.
    b. Store materials in accordance with manufacturer's recommendations.
    c. Protect products from freezing and excessive heat.
6. Manufacturers:
    a. Tremco.
    b. Sika Corporation.
    c. Pecora Corporation.
    d. Dow.
    e. Approved equal.
7. Polyurethane Sealant
    a. Single-component moisture-cure polyurethane.
    b. ASTM C920, Type S, Grade NS, Class 25.
    c. Suitable for horizontal and traffic-bearing joints.
8. Interior Silicone Sealant
    a. Neutral-cure mildew-resistant silicone.
    b. For wet areas including toilets, kitchens, and custodial rooms.
9. Acoustical Sealant
    a. Non-hardening synthetic rubber sealant.
    b. Permanently flexible.
    c. For sound-rated wall and partition assemblies.
10 Latex Sealant
    a. ASTM C834.
    b. Paintable.
    c. Interior non-moving joints only.
11. Joint Fillers and Accessories
    a. Backer Rod
    b. ASTM C1330.
    c. Closed-cell polyethylene foam for exterior joints.
    d. Open-cell polyurethane foam where recommended by manufacturer.
12. Bond Breaker Tape
    a. Polyethylene tape recommended by sealant manufacturer.
13. Primers
    a. As recommended by sealant manufacturer for specific substrates.
14. Cleaners
    a. Manufacturer-approved cleaning materials.
15. Examination
    a. Verify joints are clean, dry, and properly prepared.
    b. Do not proceed until unsatisfactory conditions have been corrected.
16. Preparation and Installation
    a. Clean joint surfaces of contaminants.
    b. Install primers where required.
    c. Install backer rods to proper depth.
    d. Protect adjacent surfaces from staining and damage.
    e. Install sealants in accordance with ASTM C1193 and manufacturer's written instructions.
    f. Install continuous sealant beads free of voids and air pockets.
    g. Tool sealants to achieve proper profile and adhesion.
    h. Maintain width-to-depth ratios recommended by manufacturer.
    i. Do not use three-sided adhesion.
16. Field Quality Control
    a. Inspect installed sealants for Continuity, Proper adhesion, Proper tooling, Freedom from voids and defects.
    b. Remove and replace defective sealant work.
17. Cleaning
    a. Remove excess sealants from adjacent surfaces.
    b. Leave completed work clean and undamaged.
18. Protection
    a. Protect installed sealants from damage during construction.
    b. Replace damaged sealants at no additional cost to Owner.

DIVISION 08 - OPENINGS

Section 08 1113 Painted Hollow Metal Doors and Frames

1. References
    a. ANSI/SDI A250.8 – Recommended Specifications for Standard Steel Doors and Frames.
    b. ANSI/SDI A250.10 – Test Procedure and Acceptance Criteria for Prime Painted Steel Surfaces.
    c. ANSI/SDI A250.11 – Maximum Tolerances for Steel Doors and Frames.
    d. ANSI/SDI A250.4 – Physical Endurance for Steel Doors.
2. Submittals
    a. Product Data for Doors, Frames, and Vision Panels.
    b. Shop Drawings including door and frame schedule, elevations and profiles, locations of glazing, louvers, and hardware reinforcements, frame anchorage details, and manufacturers installation instructions.
    c. Samples: Manufacturer's finish samples. Color selections where applicable.
    d. Manufacturer's standard warranty.
3. Manufacturer Qualifications: Minimum five years documented experience manufacturing hollow metal products.
4. Source Limitations: Obtain doors and frames from a single manufacturer whenever practical.
5. Deliver doors and frames with factory-applied primer.
6. Store doors and frames under cover and protected from weather.
7. Protect materials from damage and distortion.
8. Basis of Design: Ceco Door Products.
9. Acceptable Alternative Manufacturers:
    a. Steelcraft.
    b. Curries.
    c. Fleming.
    d. Approved Equal.
10. Materials
    a. Steel Sheet: Commercial quality cold-rolled steel complying with ASTM A1008. Galvanized steel complying with ASTM A653 where indicated.
    b. Reinforcement Plates:Minimum manufacturer's standard thickness required for hardware attachment.
    c. Anchors: Adjustable steel anchors suitable for wall construction type.
11. Interior Drywall Frames:
    a. Minimum 16-gauge steel.
    b. Welded or knock-down construction as indicated.
    c. Slip-on drywall frames not permitted unless specifically approved.
    d. Provide removable glazing stops at secure side only.
12. Hollow Metal Doors
    a. SDI Level 2, Model 1, Full Flush. See door schedule for design.
    b. Minimum 18-gauge steel face sheets.
    c. Honeycomb core.
    d. Door Edges: Seamless welded edges. Continuously ground smooth.
    e. Honeycomb Core: Kraft paper honeycomb complying with SDI requirements.
13. Hardware Reinforcements:
    a. Factory reinforce for all specified hardware.
    b. Drill and tap reinforcements at factory whenever practical.
    c. Reinforcements shall comply with ANSI/SDI A250.6 requirements.
14. Vision Panels and Glazing Frames
    a. Fabricate for glass thickness indicated.
    b. Provide screw-fastened removable glazing stops.
15. Finishes
    a. Factory Primer: Clean and phosphate-treat steel surfaces. Apply manufacturer's standard rust-inhibitive baked primer complying with ANSI/SDI A250.10.
    b. Galvanized Components: Prepare for field painting in accordance with manufacturer's recommendations.
    c. Field Finish: Painted under Division 09.
16. Examination
    a. Verify openings are correctly sized and prepared.
    b. Do not install products under unsatisfactory conditions.
17. Installation
    a. Install doors and frames in accordance with manufacturer's written instructions and SDI standards.
    b. Set frames plumb, level, aligned, and securely anchored.
    c. Brace frames until adjacent construction is complete.
    d. Coordinate installation with hardware and glazing work.
18. Field Quality Control
    a. Verify: Proper alignment, Smooth operation, Hardware function, and Label integrity.
    b. Adjust doors and hardware for proper operation.
19. Cleaning
    a. Remove protective wrappings.
    b. Clean exposed surfaces.
    c. Touch up minor abrasions using manufacturer's approved materials.
20. Protection
    a. Protect installed doors and frames from damage.
    b. Replace damaged work that cannot be satisfactorily repaired.

Section 08 33 00 Counter Tambour Shutters

1. Submittals
    a. Product Data including manufacturer's published specifications, installation instructions, and warrenty.
    b. Shop drawings indictating Opening dimensions, Headbox and guide details, Mounting requirements, and Locking provisions.
2. Quality Assurance
    a. Manufacturer shall have a minimum of three years documented experience providing tambour security shutters.
    b. Installer shall be authorized by manufacturer
    c. Provide products from single manufacturer.
3. Manufacturers
    a. Basis of Design: Dynamic Closures Corporation Model: CTS-M Tambour Shutter
4. Curtain
    a. Extruded aluminum interlocking flat slats.
    b. Slat width: 7/8 inch (22 mm).
    c. Slat depth: 9/32 inch (7 mm)
    d. Minimum aluminum thickness: 0.041 inch.
5. Bottom Bar:
    a. Extruded tubular aluminum.
    b. Manufacturer's standard profile for shutter size and loading.
6. Guides:
    a. Extruded aluminum side guides.
    b. Manufacturer's standard dimensions and configuration.
7. Operation:
    a. Manual upward coiling operation.
    b. Smooth operation without binding.
    c. Counterbalanced and configured for frequent use.
8. Locking
    a. Provide manufacturer's standard full-size mortise cylinder lock.
    b. Lock shall be easily re-keyable to Owner's keying system.
    c. Provide Side guide lock rods.
9. Finishes
    a. Factory-applied powder coat finish selected from manufacturer's standard colors.
10. Installation
    a. Install shutters in accordance with manufacturer's written instructions and approved shop drawings.
    b. Verify opening dimesnions and substrate conditions prior to installation.
    c. Secure guides, housing, and accessories rigidly and plumb.
    d. Adjust for smooth operation and proper locking engagement.
11. Cleaning and Protections
    a. Clean exposed surfaces after installation.
    b. Protect completed work from damage until Substantial Completion
    c. Replace damaged components that cannot be restored to original condition.

Section 08 7100 Door Hardware

See Project Manual for door hardware specifications.

Section 08 8000 Glazing

1. References
    a. ANSI Z97.1 – Safety Glazing Materials Used in Buildings.
    b. 16 CFR 1201 – Safety Standard for Architectural Glazing Materials.
    c. NFPA 80 – Fire Doors and Other Opening Protectives.
    d. IBC Chapter 24 – Glass and Glazing.
2. Submittals
    a. Product Data for Glass, Glazing compounds, and accessories, including Manufacturer's installation instructions.
    b. Manufacturer's standard warranty.
3. Quality Assurance
    a. Glazing materials shall be supplied by a manufacturer regularly engaged in production of architectural glazing.
    b. Safety glazing shall comply with ANSI Z97.1 and 16 CFR 1201.
4. Delivery, Storage, and Handling
    a. Deliver glass in manufacturer's unopened packaging.
    b. Protect glass from edge damage and contamination.
    c. Store vertically in dry, protected locations.
5.Manufacturers
    a. Oldcastle BuildingEnvelope.
    b. Vetrotech Saint-Gobain.
    c. Pilkington.
    d. National Glass Products.
    e. Approved Equals.
6. Interior Safety Glazing
    a. Clear Tempered Glass
    b. Comply with ASTM C1048, ANSI Z97.1, and 16 CFR 1201.
    c. Thickness: 1/4 inch (6 mm) unless indicated otherwise.
7. Glazing Accessories:
    a. Glazing Tape
        i. Closed-cell PVC or polyethylene glazing tape.
        ii. Manufacturer-approved for application.
    b. Setting Blocks
        i. Neoprene, silicone, EPDM, or approved equal.
        ii. Compatible with glazing system.
    c. Edge Blocks: Manufacturer's standard type.
    d. Glazing Gaskets
        i. Extruded EPDM or neoprene.
        ii. Compatible with frame finish and glass type.
    e. Sealants: Compatible with glazing materials.
8. Examination
    a. Verify door and frame openings are properly prepared.
    b. Verify glazing channels are clean and free of contaminants.
    c. Do not proceed until unsatisfactory conditions are corrected.
9. Installation
    a. Install glazing in accordance with manufacturer's written instructions and applicable industry standards.
    b. Install safety glazing in all locations required by code.
    c. Install fire-rated glazing in accordance with listing requirements and fire door assembly labels.
    d. Maintain proper clearances between glass edges and framing members.
    e. Protect glazing from direct contact with metal framing using setting blocks and spacers.
    f. Install glazing free from distortion, damage, and visual defects.
10. Cleaning
    a. Remove labels and temporary protection after installation.
    b. Clean glazing with materials approved by glass manufacturer.
    c. Replace damaged, chipped, cracked, or defective glazing.
11. Protection
    a. Protect installed glass from damage during construction.
    b. Replace damaged glazing at no additional cost to Owner.

DIVISION 09 - FINISHES

Section 09 2900 Gypsum Board

1. References
    a. ASTM C475 – Joint Compound and Joint Tape for Finishing Gypsum Board.
    b. ASTM C840 – Application and Finishing of Gypsum Board.
    c. ASTM C1047 – Accessories for Gypsum Wallboard.
    d. ASTM C1396 – Gypsum Board.
    e. GA-214 – Recommended Levels of Gypsum Board Finish.
    f. GA-216 – Application and Finishing of Gypsum Panel Products.
2. Submittals
    a. Product Data, inclufing Manufacturer's installation instructions:
        i. Gypsum board products.
        ii. Joint treatment materials.
        iii. Trim accessories.
        iv. Fasteners.
    b. Manufacturer's standard warranty.
3. Quality Assurance
    a. Materials shall be manufactured by firms regularly engaged in the production of gypsum board products.
    b. Install gypsum board systems in accordance with ASTM C840 and GA-216.
4. Delivery, Storage, and Handling
    a. Deliver materials in original unopened packaging.
    b. Store materials flat and protected from moisture.
    c. Protect gypsum products from exposure to weather.
5. Project Conditions
    a. Maintain environmental conditions in accordance with manufacturer's recommendations before, during, and after installation.
    b. Do not install gypsum board that has become wet, damaged, or deteriorated.
6. Manufacturers
    a. Basis of Design: USG Corporation.
    b. National Gypsum.
    c. CertainTeed.
    d. Georgia-Pacific.
    e. American Gypsum.
    f. Approved Equal.
7. Moisture- and Mold-Resistant Gypsum Board: Glass mat or treated gypsum core.
    a. Thickness: 5/8 inch unless noted otherwise.
    b. Locations: Toilet rooms, Janitor closets, Utilitiy Rooms, Plumbing chases, and Other moisture-prone locations.
8. Abuse-Resistant Gypsum Board
    a. Thickness: 5/8 inch at walls, 1/2" at ceilings, unless noted otherwise.
    b. Locations: All other locations.
9. Insulation
    a. Sound Attenuation Blankets: Mineral fiber insulation. Unfaced.
    b. Thickness to match stud depth unless indicated otherwise.
10. Joint Tape: ASTM C475. Paper tape.
11. Joint Compound: ASTM C475. Drying type or setting type as recommended by manufacturer.
12. Finishing Compound: Manufacturer's standard product compatible with joint compound.
13. Corner Beads: ASTM C1047. Galvanized steel.
14. Control Joints: ASTM C1047. Install where indicated and as recommended by GA-216.
15. Drywall Screws: ASTM C1002. Corrosion-resistant.
16. Masonry Fasteners: Manufacturer's standard type.
17. Examination
    a. Verify framing is plumb, securely anchored, and ready to receive gypsum board.
    b. Verify penetrations, backing, and rough-in work have been completed.
    c. Do not proceed until unsatisfactory conditions have been corrected.
18. Installation
    a. Install gypsum board in accordance with ASTM C840 and GA-216.
    b. Install boards with ends and edges occurring over framing members.
    c. Stagger joints on opposite sides of framing.
    d. Fit boards snugly around penetrations and openings.
    e. Install acoustical insulation in partitions indicated to receive sound attenuation treatment.
19. Joint Treatment
    a. Tape and finish joints in accordance with ASTM C840.
    b. Conceal fasteners and surface defects.
20. Finish Levels:
    a. Level 1: Concealed spaces above ceilings and utility areas.
    b. Level 4: Areas to receive flat paints, wall coverings, and typical finishes.
    c. Level 5: All other areas.
21. Tolerances
    a. Finished surfaces shall be true and even.
    b. Surface irregularities shall not exceed GA-214 requirements.
22. Repairs
    a. Repair damaged surfaces and imperfections.
    b. Replace damaged panels that cannot be satisfactorily repaired.
23. Cleaning
    a. Remove debris and excess materials from project site.
    b. Leave surfaces ready to receive finish treatments.

Section 09 3000 Tiling

1. References
    a. ANSI A108 Series – Installation of Ceramic Tile.
    b. ANSI A118 Series – Materials for Ceramic Tile Installation.
    c. ANSI A137.1 – American National Standard Specifications for Ceramic Tile.
    d. TCNA Handbook for Ceramic, Glass, and Stone Tile Installation.
    e. ASTM C373 – Water Absorption of Ceramic Tile.
    f. ASTM C627 – Evaluating Ceramic Floor Tile Installation Systems.
2. Submittals
    a. Product Data, including manufacturer's installation instructions for Tile products, Setting materials, Grout, Edge trims, and accessories.
    b. Samples of each tile type.
    c. Maintenance data.
    d. Manufacturer's standard warranty.
3. Quality Assurance
    a. Install tile in accordance with TCNA Handbook recommendations and ANSI A108 standards.
    b. Materials shall be obtained from single manufacturers for each product type whenever practical.
    c. Installer shall have a minimum of three years documented experience installing similar ceramic and porcelain tile systems.
4. Delivery, Storage, and Handling
    a. Deliver products in original unopened containers with manufacturer's labels intact.
    b. Store materials in clean, dry conditions and protect from damage.
5. Manufacturers
    a. Tile Basis of Design: Crossville, Inc. or Approved Equal.
    b. Setting Materials and Grout
        i. LATICRETE.
        ii. MAPEI.
        iii. Custom Building Products.
        iv. Approved Equal.
    c. Metal Trim: Schluter Systems or approved equal.
6. Porcelain Floor Tile
    a. Through-body porcelain floor tile.
    b. ANSI A137.1 compliant.
    c. Nominal Size: 12 inch x 24 inch.
    d. Basis of Design: Crossville Travertine Dove.
    e. Matte finish suitable for commercial applications.
    f. Dynamic Coefficient of Friction (DCOF) complying with ANSI A326.3 for level interior walking surfaces.
7. Ceramin Wall Tile
    a. ANSI A137.1 compliant.
    b. Nominal Size: 2 inch x 2 inch.
    c. Basis of Design: Crossville Travertine Ash.
    d. Locations: Select Lavatory Walls and Kitchenette Backsplashes, per the drawings.
8. Bullnose Base Tile:
    a. Nominal Size: 4 inch x 24 inch.
    b. Factory-finished bullnose edge.
    c. Basis of Design: Crossville Travertine Ash.
    d. Locations: Lavatory Walls.
9. Thin-Set Mortar:
    a. ANSI A118.4 or ANSI A118.15.
    b. Polymer-modified.
    c. Suitable for porcelain tile applications.

RENOVATIONS TO THE
EXETER TOWN HALL
742 TEN ROD RD, EXETER, RI, 02822

BREWSTER THORNTON GROUP ARCHITECTS LLP
317 Iron Horse Way,
Suite 202
Providence, RI 02908

401.861.1600
brewsterthornton.com

JOB NO. 2605
DATE 08/31/26

ISSUE : **BID DOCUMENTS**

NO.	REVISION DESCRIPTION	DATE

SHEET TITLE
SPECIFICATIONS

SHEET
G004

8/31/2026 12:24:52 PM

10. Waterproofing Membrane:
    a. ANSI A118.10 compliant.
    b. Provide at wet walls and other moisture-exposed locations.
11. Epoxy Grout:
    a. ANSI A118.3.
    b. Chemical-resistant, stain-resistant, waterproof epoxy grout.
    c. Color as selected by Architect from manufacturer's full range.
    d. All tile grout shall be epoxy-based.
12. Metal Edge Trim:
    a. Anodized aluminum, stainless steel, or color-coated aluminum as selected by Architect.
    b. Locations:
        i. All exposed exterior tile corners.
        ii. From finished floor to ceiling.
        iii. At locations where tile terminates against dissimilar materials.
    c. Provide profiles with square, clean architectural appearance.
13. Movement Joint Materials: As recommended by tile manufacturer and TCNA requirements.
14. Examination:
    a. Verify substrates are properly prepared, dry, clean, and suitable for tile installation.
    b. Do not begin installation until unsatisfactory conditions have been corrected.
15. Preparation:
    a. Prepare substrates in accordance with tile manufacturer recommendations.
    b. Install waterproofing membrane at wet walls prior to tile installation.
16. Tile Installation
    a. Install tile in accordance with ANSI A108, TCNA Handbook recommendations, and manufacturer's written instructions.
    b. Lay tile true to line and level with uniform joint widths.
    c. Center tile layouts in visible areas and minimize cut pieces.
    d. Install metal edge trim at all exposed exterior corners extending from floor to ceiling.
    e. Install movement joints as required by TCNA EJ171.
17. Grouting
    a. Grout joints using epoxy grout after tile setting materials have cured.
    b. Completely fill joints and tool smooth.
    c. Remove grout residue from tile surfaces.
18. Cleaning
    a. Clean tile surfaces upon completion of grouting.
    b. Remove excess adhesive, grout haze, and construction debris.
19. Protection
    a. Protect completed tile work from damage until Substantial Completion.
    b. Replace cracked, chipped, stained, or otherwise damaged tile at no additional cost to Owner.

Section 09 5113 Acoustical Panel Ceilings
1. Scope includes:
    a. Replacement of existing acoustical ceiling panels.
    b. New acoustical ceiling panels in existing suspended ceiling grid systems.
    c. Limited replacement or modification of existing suspension system components as required.
    d. Accessories required for a complete ceiling installation.
2. References
    a. ASTM E1264 – Standard Classification for Acoustical Ceiling Products.
    b. ASTM E84 – Surface Burning Characteristics of Building Materials.
    c. ASTM C635 – Metal Suspension Systems for Acoustical Tile and Lay-In Panel Ceilings.
    d. ASTM C636 – Installation of Metal Ceiling Suspension Systems.
    e. CISCA Ceiling Systems Handbook.
3. Submittals
    a. Product Data, including manufacturer's installation instructions: Ceiling panels and Accessories.
    b. Manufacturer's standard warranty.
4. Quality Assurance
    a. Manufacturer shall have a minimum of five years documented experience producing acoustical ceiling products.
    b. Install products in accordance with manufacturer's written instructions and industry standards.
5. Delivery, Storage, and Handling
    a. Deliver materials in original unopened packages.
    b. Store materials in a clean, dry, enclosed location.
    c. Protect ceiling materials from moisture, damage, and staining.
6. Manufacturers:
    a. Armstrong World Industries.
    b. CertainTeed.
    c. USG Ceilings.
    d. Rockfon.
    e. Approved Equal.
7. Acoustical Ceiling Tile:
    a. Size: 24 inches by 24 inches.
    b. Lay-in ceiling panel for installation within existing suspended ceiling grid.
    c. Fine-texture mineral fiber panel.
    d. Color: White.
    e. Edge Profile: Square Lay-In.
    f. NRC: Minimum 0.90.
    g. Light Reflectance: Minimum 0.85.
    h. Surface Burning Characteristics: a. Flame Spread: 25 or less. b. Smoke Developed: 50 or less.
8. Basis of Design: Armstrong Ultima High NRC Square Lay-In.
9. Replace existing ceiling tiles where indicated. Provide matching new ceiling tiles in areas of renovation and ceiling modifications.
10. Existing Suspension System
    a. Existing ceiling grid shall remain unless specifically noted otherwise. Paint all existing and new.
    b. Match existing grid type, profile, width, color, and finish in areas requiring replacement or modification.
    c. Replace bent, damaged, corroded, or improperly aligned grid components.
    d. New grid components shall be compatible with existing suspension system.
11. Hold-Down Clips: Provide where recommended by manufacturer or required by code.
12. Replacement Grid Components: Main runners, Cross tees, Wall moldings, Connection clips and accessories required to match existing installation.
13. Examination:
    a. Verify existing grid system is suitable for reuse.
    b. Notify Architect of damaged or deficient conditions requiring correction prior to installation.
14. Installation
    a. Remove existing ceiling panels designated for replacement.
    b. Install new ceiling panels in accordance with manufacturer's written instructions.
    c. Replace damaged grid components as required to provide a complete installation.
    d. Align ceiling panels properly and fit neatly around lights, diffusers, sprinkler heads, and other ceiling-mounted devices.
    e. Match existing grid in all areas of modification and replacement.
15. Cleaning
    a. Remove debris and discarded ceiling materials from the site.
    b. Clean exposed grid surfaces.
    c. Replace damaged, stained, or broken ceiling panels.
16. Protection
    a. Protect completed ceiling work from damage until Substantial Completion.
    b. Replace damaged ceiling panels and grid components at no additional cost to Owner.

Section 09 6500 Resilient Flooring
1. References
    a. ASTM F710 – Preparing Concrete Floors to Receive Resilient Flooring.
    b. ASTM F1700 – Solid Vinyl Floor Tile.
    c. ASTM F1869 – Moisture Vapor Emission Rate of Concrete Subfloors.
    d. ASTM F2170 – Relative Humidity in Concrete Floor Slabs.
    e. ASTM E648 – Critical Radiant Flux of Floor Covering Systems.
    f. ASTM E662 – Smoke Density of Flooring Products.
2. Submittals
    a. Product Data, including manufacturer's installation instructions: Luxury vinyl flooring, Adhesives, and accessories.
    b. Samples: LVT tile.
    c. Maintenance data.
    d. Manufacturer's standard warranty.
3. Quality Assurance
    a. Manufacturer shall have a minimum of five years experience producing resilient flooring products.
    b. Installer shall be experienced in installation of resilient flooring and finish trim systems.
    c. Install materials in accordance with manufacturer's written instructions.
4. Delivery, Storage, and Handling
    a. Deliver materials in original unopened containers.
    b. Store materials in a dry, enclosed location.
    c. Protect flooring and trim materials from damage, moisture, and temperature extremes.
5. Luxury Vinyl Tile Flooring Manufacturers
    a. Basis of Design: Armstrong Flooring.
    b. Approved Equal.
6. Luxury Vinyl Tile Flooring
    a. Commercial-grade Wood-Look Luxury Vinyl Plank
    b. Size: Manufacturer's standard plank dimensions.
    c. Wear Layer: Minimum 20 mil.
    d. Surface Texture: Embossed wood grain.
    e. Edge Profile: Micro-beveled.
    f. Basis of Design: Armstrong Natural Creations with Diamond 10 Technology.
        i. Pattern: NA190 Avila Oak.
        ii. Color: Moroccan Sand.
    g. Performance Requirements
    h. Comply with ASTM F1700.
    i. Class I, Type B Commercial Flooring.
    j. Slip-resistant finish suitable for commercial applications.
7. Adhesives: Flooring manufacturer's recommended adhesive.
8. Transition Strips: Manufacturer's standard profiles, unless noted otherwise on the drawings. Coordinate finishes with flooring and adjacent materials.
9. Fasteners: Corrosion-resistant type recommended by trim manufacturer.
10. Examination
    a. Verify substrates are smooth, dry, clean, and suitable for installation.
    b. Verify concrete moisture conditions comply with flooring manufacturer's requirements.
    c. Do not proceed until unsatisfactory conditions have been corrected.
11. Preparation
    a. Prepare substrates in accordance with ASTM F710 and manufacturer's recommendations.
    b. Repair substrate defects that could affect finished appearance.
12. Installation
    a. Install flooring in accordance with manufacturer's written instructions.
    b. Lay flooring in uniform pattern with tight-fitting joints.
    c. Maintain consistent plank alignment throughout spaces.
    d. Install transition strips at changes in flooring materials.
13. Cleaning
    a. Remove adhesive residue and construction debris.
    b. Clean finished flooring and trim surfaces in accordance with manufacturer's recommendations.
14. Protection
    a. Protect installed flooring and trim from damage during construction.
    b. Replace damaged materials that cannot be satisfactorily repaired.

Section 09 6813 Carpeting
1. References
    a. ASTM E648 – Critical Radiant Flux of Floor Covering Systems.
    b. ASTM E662 – Smoke Density of Flooring Materials.
    c. ASTM F710 – Preparing Concrete Floors to Receive Resilient Flooring.
    d. CRI Carpet Installation Standard.
    e. Carpet and Rug Institute (CRI) Green Label Plus Program.
2. Submittals
    a. Product Data, including manufacturer's installation instructions. : Carpet tile, Adhesives, and Installation accessories.
    b. Samples: Full-size carpet tile sample.
    c. Maintenance data.
    d. Manufacturer's standard commercial warranty.
3. Quality Assurance
    a. Manufacturer shall have a minimum of five years documented experience producing commercial carpet products.
    b. Installer shall be experienced in commercial carpet tile installations.
    c. Install materials in accordance with manufacturer's written instructions and CRI requirements.
4. Delivery, Storage, and Handling
    a. Deliver materials in original unopened packaging.
    b. Store materials in a clean, dry, enclosed space.
    c. Protect materials from damage, soiling, moisture, and temperature extremes.
5. Manufacturers
    a. Basis of Design: Shaw Contract.
    b. Interface.
    c. Milliken.
    d. Mohawk Group.
    e. Approved Equal.
6. Modular Carpet Tile
    a. Type: Tufted modular carpet tile.
    b. Size: 18 inches x 36 inches.
    c. Dye Method: Manufacturer's standard.
    d. Backing: Manufacturer's standard commercial backing system suitable for adhesive installation.
    e. Installation Method: Ashlar pattern unless otherwise indicated.
    f. Basis of Design Shaw Contract Cross Weave: Style No. 5T526.
    g. Performance Requirements
    h. Class I Radiant Flux Classification, ASTM E648.
    i. Smoke Density: 450 or less, ASTM E662.
    j. Green Label Plus certified.
7. Rubber Stair Nosing
    a. Armstrong, or equal.
    b. Color to be selected by Architect from standard range.
8. Adhesives
    a. Low-VOC adhesive recommended by carpet manufacturer.
    b. Compatible with substrate and carpet backing.
9. Transition Strips
    a. Provide at transitions between carpet and adjacent flooring materials.
    b. Finish and profile as selected by Architect.
10. Edge Accessories: Manufacturer's standard products required for complete installation.
11. Examiniation
    a. Verify substrates are dry, clean, smooth, and acceptable for carpet installation.
    b. Verify moisture levels comply with carpet manufacturer's requirements.
    c. Do not proceed until unsatisfactory conditions have been corrected.
12. Preparation
    a. Prepare substrates in accordance with ASTM F710 and manufacturer's recommendations.
    b. Remove substances that may impair adhesive bond.
13. Installation
    a. Install carpet tile in accordance with manufacturer's written instructions.
    b. Maintain consistent orientation and pattern alignment throughout each space.
    c. Install carpet tiles tightly fitted with no visible gaps.
    d. Install transition strips and edge accessories where carpet abuts dissimilar flooring materials.
    e. Replace damaged or improperly aligned carpet tiles.
14. Cleaning
    a. Remove adhesive residue and installation debris.
    b. Vacuum carpeted areas upon completion of installation.
15. Protection
    a. Protect installed carpet from traffic and damage until Substantial Completion.
    b. Replace stained, damaged, or defective carpet tiles at no additional cost to Owner.

Section 09 7200 Wallcovering
1. Decorative wallcovering applied to interior gypsum board and other prepared wall surfaces. Adhesives, primers, and accessories required for complete installation.
2. Reference
    a. Wallcovering Manufacturers Association (WIA) installation standards.
    b. ASTM E84 - Surface Burning Characteristics of Building Materials.
    c. ASTM F793 - Standard Classification System for Wallcoverings by Use Characteristics.
3. Submittals
    a. Product Data, including maintenance data for cleaning and repair: Manufacturer's technical data, installation instructions, maintenance instructions, and fire-test information.
    b. Samples: Minimum 8-inch x 10-inch sample of each wallcovering type and pattern specified.
    c. Attic Stock: Provide 5% attic stock materials to the Owner.
    d. Provide manufacturer's standard warranty against defects in materials and workmanship.
4. Quality Assurance
    a. Installer shall have a minimum of three years documented experience installing commercial wallcoverings.
    b. Install wallcovering in accordance with manufacturer's written instructions and industry standards.
5. Delivery, Storage, and Handling
    a. Deliver materials in manufacturer's original unopened packaging.
    b. Store materials flat, in a dry, conditioned space between 55 and 85 degrees F.
    c. Protect materials from moisture, direct sunlight, and physical damage.
    d. Maintain room temperature and humidity levels recommended by manufacturer before, during, and after installation.
    e. Do not install wallcoverings until wet work is complete and building is enclosed and conditioned.
6. Manufacturers:
    a. Basis of Design: Designer Wallcoverings: Carnegie Zatacoustic 87 (SKU #DWAG-376402) - Color Putty
    b. York Wallcoverings.
    c. Brewster Home Fashions.
7. Product:
    a. Non-woven or peel-and-stick decorative wallcovering as selected from manufacturer's standard offering.
    b. Washable and scrubbable surface.
    c. Resistant to fading under normal interior conditions.
    d. Class A flame spread rating when tested in accordance with ASTM E84.
8. Primer: Manufacturer's recommended wallcovering primer.
9. Adhesive: Manufacturer's recommended clear, strippable adhesive compatible with wallcovering substrate.
10. Seam Treatment: As recommended by wallcovering manufacturer.
11. Examination
    a. Verify substrates are smooth, clean, dry, and free of defects that would impair adhesion.
    b. Do not begin installation until unsatisfactory conditions have been corrected.
12. Preparation
    a. Prepare wall surfaces in accordance with wallcovering manufacturer's recommendations.
    b. Fill, sand, and smooth wall imperfections.
    c. Prime surfaces using approved wallcovering primer.
13. Installation
    a. Install wallcovering plumb, level, accurately aligned, and free from wrinkles, bubbles, tears, or visible defects.
    b. Match pattern at seams and corners.
    c. Trim neatly at ceilings, base, outlets, controls, and other interruptions.
    d. Install in accordance with manufacturer's written instructions.
14. Cleaning
    a. Remove adhesive residue and soiled materials from wallcovering surfaces.
    b. Replace damaged or visibly defective wallcovering panels.
15 Protection
    a. Protect completed wallcovering installation from damage until Substantial Completion.

Section 09 8116 Acoustical Insulation
1. Sound-attenuation insulation installed within interior stud partitions and installed above ceilings where indicated.
2. References
    a. ASTM C665 – Mineral-Fiber Blanket Thermal Insulation for Light Frame Construction and Manufactured Housing.
    b. ASTM E90 – Laboratory Measurement of Airborne Sound Transmission Loss.
    c. ASTM E413 – Classification for Rating Sound Insulation.
    d. ASTM C553 – Mineral Fiber Blanket Thermal Insulation for Commercial and Industrial Applications.
3. Submittals
    a. Product Data: Manufacturer's product literature, including physical properties, and acoustical performance data.
4. Delivery, Storage, and Handling
    a. Deliver materials in original unopened packaging with labels intact.
    b. tore in a clean, dry location above ground and protected from moisture.
    c. Do not install insulation that has become wet or damaged.
    d. Onstall only after mechanical, electrical, and plumbing rough-ins have been inspected and approved.
5. Manufacturers
    a. Basis of Design: Owens Corning Thermafiber SAFB (Sound Attenuation Fire Blankets).
    b. Owens Corning Thermafiber SAFB.
    c. Rockwool Safe'n'Sound.
    d. CertainTeed AcoustaTherm.
    e. Johns Manville Sound & Fire Block.
6. Product
    a. Mineral Wool Sound Attenuation Blankets:
    b. Unfaced mineral wool batt insulation.
    c. Thickness: Match wall cavity depth; 3-1/2 inches for 3-5/8 inch studs unless otherwise indicated.
    d. Density: Minimum 2.5 pcf.
    e. Noncombustible.
    f. Water-repellent and mold-resistant.
    g. Minimum NRC: 1.00.
    h. ASTM C665, Type I compliant.
    i. Install continuously from floor to structure or to top of partition.
    j. Provide fasteners and support materials as recommended by insulation manufacturer.
    k. Supply supplemental insulation retaining devices as required to maintain full cavity coverage.
7. Examination/Installation
    a. Verify framing and wall cavities are complete and ready to receive insulation.
    b. Do not begin installation until unsatisfactory conditions have been corrected.
    c. Install insulation in accordance with manufacturer's written instructions.
    d. Completely fill stud cavities without gaps, voids, compression, or folds.
    e. Fit insulation tightly around electrical boxes, conduit, piping, and other penetrations.
    f. Do not leave open spaces or discontinuities that would reduce acoustical performance.
    g. Install insulation prior to gypsum board installation.
8. Field Quality Control and Protection
    a. Inspect insulation for complete cavity coverage before enclosure.
    b. Remove and replace damaged, compressed, or wet insulation.
    c. Protect installed insulation from damage and moisture until wall and ceiling assemblies are enclosed. Infill new walls with acoustic insulation.

Section 09 9000 Painting
1. References
    a. MPI (Master Painters Institute) Architectural Painting Specification Manual.
    b. ASTM D16 – Terminology for Paint and Related Coatings.
    c. ASTM D4258 – Surface Cleaning Concrete for Coating.
    d. ASTM D4259 – Abrading Concrete.
2. Submittals
    a. Product Data: Manufacturer's technical literature for each coating system, including surface preparation, application requirements, and maintenance information.
    b. Draw-Down Samples for each color.
    c. Attic Stock: Provide unused paint to Owner in quantities not less than:
        i. One gallon of each color and type used, or five percent of each paint product used, whichever is greater.
        ii. Deliver in original unopened containers clearly labeled with location of use and color designation.
3. Quality Assurance
    a. Manufacturer shall have a minimum five years experience producing specified products.
    b. Applicator shall be experienced in commercial painting work of similar scope.
    c. Materials shall be from a single manufacturer whenever possible.
    d. Provide manufacturer's standard warranty.
4. Delivery, Storage, and Handling
    a. Deliver materials in original, unopened containers bearing manufacturer's labels.
    b. Store materials in dry, ventilated areas protected from freezing and excessive heat.
    c. Maintain ambient temperature and humidity within manufacturer's recommended limits during application and curing.
    d. Do not paint surfaces that are damp, frozen, or otherwise unsuitable for receiving finishes.
5. Manufacturers
    a. Benjamin Moore.
    b. Sherwin-Williams.
    c. PPG Paints.
6. Materials
    a. Low-VOC coatings complying with applicable environmental regulations.
    b. Products compatible with substrates and primers specified.
7. Gypsum Board Walls
    a. Basis of Design:Benjamin Moore Ultra Spec 500.
    b. System:
        i. Primer: Benjamin Moore Acrylic Latex Primer.
        ii. Finish Coats: Two coats acrylic latex eggshell.
    c. Finish: Eggshell.
8. Gypsum Board Ceilings
    a. Basis of Design:Benjamin Moore Ultra Spec 500.
    b. System:
        i. Primer: Acrylic Latex Primer.
        ii. Finish Coats: Two coats acrylic latex flat.
    c. Finish: Flat.
9. Hollow Metal Doors, Frames, and ACT grid.
    a. Basis of Design: Benjamin Moore Corotech High Performance Coatings.
    b. System:
        i. Spot-prime damaged factory primer.
        ii. Two finish coats acrylic semi-gloss enamel.
    c. Finish: Semi-gloss.
10. Composite Trim
    a. Basis of Design: Benjamin Moore Scuff-X Interior Acrylic Enamel
    b. System:
        i. Spot prime cut edges, damaged surfaces, and field-modified areas with manufacturer's recommended primer.
        ii. Apply two finish coats of acrylic enamel.
    c. Finish: Semi-Gloss.
11. Masonry and Stucco Primer
    a. Sherwin-Williams Loxon XP Concrete & Masonry Primer
    b. Benjamin Moore Ultra Spec Masonry Elastrometric Coating
    c. PPG Perma-Crete Masonry Sealer
12. Exterior Acrylic Masonry Paint
    a. Sherwin-Williams A-100 Exterior Acrylic Latex
    b. Benjamin Moore Ultra Spec Masonry Elastrometric Coating
    c. PPG Perma-Crete Acrylic Masonry Coating
    d. 100% acrylic latex coating specifically formulated for stucco and masonry.
    e. Breatheable, mildew-resistant, and alkali resistant
    f. Flat or low-luster finish unless otherwise noted
    g. Elasometric masonry patching compound compatible with coating sytem
13. Examination/Preparation
    a. Verify surfaces are properly prepared and suitable to receive finishes.
    b. Do not begin painting until unsatisfactory conditions have been corrected.
    c. Clean surfaces free of dust, dirt, grease, oil, and other contaminants.
    d. Fill holes, cracks, and surface imperfections.
    e. Sand repaired areas smooth and feather into adjacent surfaces.
    f. Protect adjacent finishes and installed work from paint splatter and damage.
14. Application
    a. Apply coatings in accordance with manufacturer's written instructions.
    b. Apply each coat evenly to produce a uniform appearance.
    c. Do not apply succeeding coats until preceding coats are fully cured.
    d. Minimum Coating Requirements:
        i. Primer plus two finish coats on new surfaces unless factory primed.
        ii. Spot-prime repaired areas before finish painting.
    e. Provide complete coverage free of runs, sags, brush marks, roller marks, holidays, or other defects.
15. Field Quality Control
    a. Defective work shall be repaired or refinished until acceptable to Architect.
    b. Variations in color, sheen, texture, or coverage are grounds for rejection.
16. Cleaning
    a. Remove paint from adjacent surfaces not intended to be painted.
    b. Dispose of waste materials in accordance with applicable regulations.
    c. Leave premises clean at completion of Work.

RENOVATIONS TO THE
EXETER TOWN HALL
742 TEN ROD RD, EXETER, RI, 02822

BREWSTER THORNTON GROUP ARCHITECTS LLP
317 Iron Horse Way, Suite 202
Providence, RI 02908
401.861.1600
brewsterthornton.com

JOB NO. 2605
DATE 08/31/26
ISSUE : **BID DOCUMENTS**

NO.	REVISION DESCRIPTION	DATE

SHEET TITLE
SPECIFICATIONS

SHEET
G005

8/31/2026 12:24:52 PM

DIVISION 10 - SPECIALTIES

Section 10 1400 Interior Signage
1. References
    a. Americans with Disabilities Act (ADA) Standards for Accessible Design.
    b. ICC A117.1 – Accessible and Usable Buildings and Facilities.
    c. ASTM D709 – Laminated Thermosetting Materials.
2. Submittals
    a. Product Data: Manufacturer's specifications including materials, finishes, colors, mounting methods, and installation requirements.
    b. Shop Drawings including sign schedule, message content, typeface, colors, symbols, pictograms, mounting heights, and locations.
    c. Manufacturer's standard warranty against defects in materials and workmanship.
    d. Provide an updated floor plan on the existing fire egress sign.
    e. Mounting details and stud locations for pin-mounted letters.
3. Quality Assurance
    a. Provide signage from a single manufacturer.
    b. Comply with ADA and ICC A117.1 requirements for accessible signage.
    c. Obtain Architect's approval of sign message schedule prior to fabrication.
4. Delivery, Storage, and Handling
    a. Deliver signs in protective packaging.
    b. Store in a clean, dry location protected from damage.
5. Manufacturers (Room Signage)
    a. APCO Graphics.
    b. Mohawk Sign Systems.
    c. Takeform.
    d. Inpro Corporation.
6. Manufacturers (Pin-Mounted Lettering)
    a. Gemini, Inc.
    b. Matthews architectural Products.
    c. Ace Sign Systems.
7. Interior Signage: Room Identification Signs
    a. ADA-compliant tactile signs.
    b. Material: Photopolymer or layered acrylic construction.
    c. Lettering: Raised characters. Grade 2 Braille. Sans-serif font.
    d. Finish: Matte, non-glare surface.
    e. Color: Architect-selected colors with visual contrast between background and characters.
8. Pin-Mounted Dimensional Letter Signage
    a. Materials: Cast aluminum.
    b. Thickness: 1/4-inch
    c. Finish: Brushed aluminum.
    d. Letter Style: Font as selected by Architect. See interior for general locations/sizing.
    e. Mounting: Concealed stud-mounted (pin-mounted) installation.
    f. Accessories: Fasteners and anchors suitable for substrate.
9. Fabrication
    a. Fabricate signs with square edges and uniform appearance.
    b. Provide concealed mounting where possible.
    c. Provide vandal-resistant construction in public areas.
    d. Radius corners unless otherwise indicated.
10. Accessories
    a. Double-sided foam tape approved by manufacturer.
    b. Silicone adhesive where required.
    c. Mechanical fasteners where indicated.
11. Examination/Installation
    a. Verify wall surfaces are complete and ready for installation.
    b. Verify sign locations with Architect prior to installation.
    c. Install signs level, plumb, and securely attached.
    d. Install room identification signs adjacent to latch side of door, unless noted otherwise on interior elevations.
    e. Mount tactile signs in accordance with ADA requirements.
    f. Locate signs to avoid conflicts with door swings, trim, wall protection, and accessories.
    g. Remove protective coverings after installation.
    h. Clean exposed sign surfaces.
    i. Replace damaged signs.

Section 10 2113 Toilet Compartments
1. References
    a. ASTM E84 – Surface Burning Characteristics of Building Materials.
    b. NFPA 286 – Standard Methods of Fire Tests for Evaluating Contribution of Wall and Ceiling Interior Finish to Room Fire Growth.
    c. ADA Standards for Accessible Design.
    d. ICC A117.1 – Accessible and Usable Buildings and Facilities.
2. Submittals
    a. Product Data: Manufacturer's specifications and installation instructions, including material, color, finish, and hardware information.
    b. Shop Drawings: lans, elevations, mounting details, and attachment methods. Accessible compartment layouts and clearances.
    c. Provide manufacturer's standard warranty.
    d. Attic Stock
        i. Two complete sets of hinges, latches, coat hooks, bumpers, and door pulls.
        ii. One spare panel bracket of each type used.
        iii. One quart touch-up repair kit, if available from manufacturer.
3. Quality Assurance
    a. Manufacturer shall specialize in fabrication of toilet compartment systems.
    b. Components shall be supplied by a single manufacturer.
    c. Accessible compartments shall comply with ADA and ICC A117.1 requirements.
4. Delivery, Storage, and Handling
    a. Deliver materials in manufacturer's original packaging.
    b. Store in a clean, dry area and protect from damage.
5. Manufacturers
    a. Basis of Design:
        i. Scranton Products - Hiny Hiders® Partitions.
        ii. Product Line: Eclipse® Toilet Partitions.
    b. Substitutions: Subject to compliance with specifications and approval by Architect.
6. Material:
    a. Solid polymer construction.
    b. Homogeneous, color-through material.
    c. Moisture-resistant, corrosion-resistant, and graffiti-resistant.
7. Configuration: Floor-mounted, overhead-braced.
8. Height: 5-inch standard-height doors and panels.
9. Color and Texture: White, Orange Peel texture.
10. Fire Performance: Assembly shall meet NFPA 286 requirements. Material shall not support combustion and shall comply with applicable code requirements.
11. Accessible Compartments: Provide compartment sizes, turning clearances, grab bar clearances, and door configurations complying with ADA and ICC A117.1.
12. Hardware: Manufacturer's standard heavy-duty stainless steel hardware. including Hinges, Latch mechanisms, Door pulls, Coat hooks and bumpers, Pilaster shoes, Brackets, and fasteners.
    a. Finish: Satin stainless steel.
13. Accessories
    a. Headrails, supports, brackets, and anchors as recommended by manufacturer.
    b. Concealed tamper-resistant fasteners where accessible to occupants.
14 Examination and Installation
    a. Verify walls, floors, and supports are ready to receive toilet compartments.
    b. Do not begin installation until unsatisfactory conditions have been corrected.
    c. Install toilet compartments in accordance with manufacturer's written instructions.
    d. Set units level, plumb, rigid, and securely anchored.
    e. Maintain uniform allignment and clearances between components.
    f. Install accessible compartments in compliance with ADA requirements.
    g. Adjust doors for proper operation.
    h. Verify latches engage properly and doors swing freely without binding.
    i. Remove protective coverings and construction debris.
    j. Clean exposed surfaces using manufacturer-approved cleaners.
    k. Replace damaged components.

Section 10 2800 Toilet Accessories
1. References
    a. ADA Standards for Accessible Design.
    b. ICC A117.1 – Accessible and Usable Buildings and Facilities.
    c. ASTM A240 – Chromium and Chromium-Nickel Stainless Steel Plate, Sheet, and Strip.
2. Submittals
    a. Product Data: Manufacturer's product literature and installation instructiona, including dimensions, mounting requirements, and finishes.
    b. Provide manufacturer's standard warranty.
    c. Attic Stock:
        i. Two spare grab bar mounting kits.
        ii. Two spare coat hooks.
        iii. One replacement changing station safety strap.
        iv. Manufacturer's adjustment tools and keys for AED cabinet, where applicable.
3. Quality Assurance
    a. Accessories of each type shall be furnished by a single manufacturer whenever possible.
    b. Accessible accessories shall comply with ADA and ICC A117.1 requirements.
4. Delivery, Storage, and Handling
    a. Deliver products in manufacturer's original packaging.
    b. Protect products from damage prior to installation.
5. Manufacturers
    a. Basis of Design:
        i. Bradley Corporation.
        ii. Cardiac Science.
        iii. Koala Kare Products.
    b. Approved Equal:
        i. Bobrick.
        ii. ASI.
        iii. Frost.
6. Grab Bars (A1 & A2)
    a. ADA-compliant stainless steel grab bars.
    b. Satin Stainless finish.
    c. Concealed mounting flanges.
    d. Lengths as indicated on Drawings.
7. Sanitary Receptables (A3) - Provided by Owner, installed by contractor.
8. Toilet Paper Dispenser (A4) - Provided by Owner, installed by contractor.
9. Coat Hooks (A5) - Provided by Owner, installed by contractor.
10. Battery-Operated Hand Dryer or Papertowel Dispenser (A6) - Provided by Owner, installed by contractor.
11. Sink Mirrors (A7)
    a. Basis of Design: a. Bradley Elvari Series Model 7B1.
    b. Size: 24 inches x 36 inches.
    c. Description: Frameless tempered glass mirror qith concealed mounting system.
12. Soap Dispenser (A8) - Provided by Owner, installed by contractor.
13. Large Mirror (A10)
    a. Basis of Design: a. Bradley Model 747.
    b. Size: 36 inches x 60 inches.
    c. Description: Frameless mirror with float glass, polished edges, and concealed mounting.
14. Automated External Defibrillator (AED) (A11)
    a. Basis of Design: Cardiac Science AED.
    b. Cabinet Type: Semi-recessed cabinet.
    c. Finish: White.
    d. Features:
        i. Identification graphics.
        ii. Manufacturer's standard alarm.
        iii. Lockable or non-lockable configuration as selected by Owner.
11. Baby Changing Station (A12)
    a. Basis of Design: Koala Kare Baby Changing Station.
    b. Description: Horizontal, wall-mounted unit. High-density polyethylene construction. Concealed steel mounting chassis. Integral safety strap. ASTM and ADA compliant.
    c. Color: Manufacturer's standard light gray.
12. Fasteners and Accesories
    a. Provide anchors, backing plates, fasteners, and hardware required for secure installation.
    b. Exposed fasteners shall be stainless steel.
13. Examination and Installation
    a. Verify walls contain required blocking and supports.
    b. Do not begin installation until unsatisfactory conditions have been corrected.
    c. Install accessories plumb, level, and in accordance with manufacturer's written instructions.
    d. Mount accessories at heights required by ADA and as indicated on Drawings.
    e. Securely anchor accessories to structural backing.
    f. Coordinate locations with partitions, doors, and adjacent accessories.
14. Adjusting
    a. Adjust accessories to ensure proper operation.
    b. Verify changing station and AED cabinet operate smoothly and safely.
15. Cleaning
    a. Remove labels and protective films.
    b. Clean exposed surfaces.
    c. Replace damaged accessories.

DIVISION 11 - EQUIPMENT

Section 11 3100 Residential Appliances
1. Existing residential refrigerator to be reused.
2. Owner to provide and install countertop microwave and any other small kitchen appliance.
3. Owner to purchase LCD screen in the Conference Room for contractor installation.
4. Existing screens in Meeting Room to be removed and reinstalled by the contractor as needed to complete the scope of work.

DIVISION 12 - FURNISHINGS

Section 12 2413 Roller Window Shades
1. References
    a. WCMA ANSI/WCMA A100.1 – Safety of Corded Window Covering Products.
    b. NFPA 701 – Fire Tests for Flame Propagation of Textiles and Films.
2. Submittals
    a. Product Data: Manufacturer's product literature, including fabric characteristics, performance data, hardware, and operating mechanism information.
    b. Shop Drawings:
        i. Shade schedule.
        ii. Shade sizes and mounting conditions.
        iii. Bracket and fascia details.
    c. Provide manufacturer's standard warranty.
    d. Attic Stock: Manufacturer's adjustment tools and maintenance instructions.
3. Quality Assurance
    a. Provide roller shades from a single manufacturer.
    b. Fabrication tolerances and installation shall comply with manufacturer's written recommendations.
4. Delivery, Storage, and Handling
    a. Deliver products in manufacturer's original packaging.
    b. Store in a clean, dry location protected from moisture and damage.
5. Basis of Design:
    a. Rollease Acmeda.
    b. R-Series Roller Shade System.
6. Approved Equal:
    a. Mecho.
    b. Draper.
    c. Hunter Douglas Architectural.
    d. BTX Intelligent Fashion.
7. Roller Shades
    a. Provide manually clutch-operated roller shades.
    b. Install at all interior windows and glazed doors unless otherwise indicated.
    c. Fabricate shades to dimensions required for a complete blackout/privacy installation within the limitations of the shade system.
8. Operating System:
    a. Rollease R-Series clutch-operated roller shade system.
    b. Stainless steel or aluminum mounting brackets.
    c. Child-safe chain tension device.
9. Fascia:
    a. Extruded aluminum fascia with matching end caps.
    b. Size as required to fully conceal roller tube, fabric roll, and operating mechanism.
    c. Color: White.
10. Roller Tube: anufacturer's standard extruded aluminum tube sized to prevent excessive deflection.
11. Hem Bar: Enclosed extruded aluminum hem bar. Color to match fascia.
12. Shade Fabric
    a. Basis of Design Fabric: Rollease Acmeda 3000 Series.
    b. Fabric Characteristics:
        i. Vinyl-coated fiberglass or polyester performance fabric.
        ii. Openness Factor: 1 percent.
        iii. Color: Beige/Gray.
        iv. Privacy fabric.
        v. Flame resistant and NFPA 701 compliant.
        vi. Antimicrobial and mold resistant.
        vii. Suitable for commercial interior applications.
13. Light Control
    a. Provide privacy shade fabric with approximately 1 percent openness factor.
    b. Fabric shall maintain outward visibility while limiting inward visibility and controlling glare.
14. Accessories
    a. Brackets, fasteners, and mounting hardware as recommended by manufacturer.
    b. Provide intermediate brackets and supports as required for shade width and loading conditions.
15. Examination and Installation
    a. Verify window openings and installation conditions prior to fabrication.
    b. Do not begin installation until unsatisfactory conditions have been corrected.
    c. Install shades in accordance with manufacturer's written instructions.
    d. Install shades level, plumb, and properly aligned.
    e. Mount shades to permit smooth operation without binding.
    f. Install fascia continuously across each shade assembly to fully conceal roller components.
    g. Coordinate installation with window hardware, glazing systems, and adjacent construction.
16. Adjusting
    a. Adjust shades for smooth and uniform operation.
    b. Verify proper alignment of hem bars and fabric tracking.
    c. Replace damaged or defective components.
17. Cleaning
    a. Clean exposed surfaces after installation.
    b. Remove labels and packaging materials.
18. Provide shades at all interior windows and glass doors.
19. Remove, protect, and reinstall all exterior window shades. Clean thoroughly before reinstallation.

RENOVATIONS TO THE
EXETER TOWN HALL
742 TEN ROD RD, EXETER, RI, 02822

BREWSTER THORNTON GROUP ARCHITECTS LLP
317 Iron Horse Way, Suite 202
Providence, RI 02908
401.861.1600
brewsterthornton.com

JOB NO. 2605
DATE 08/31/26
ISSUE : **BID DOCUMENTS**

NO.	REVISION DESCRIPTION	DATE

SHEET TITLE
SPECIFICATIONS

SHEET
G006

8/31/2026 12:24:52 PM

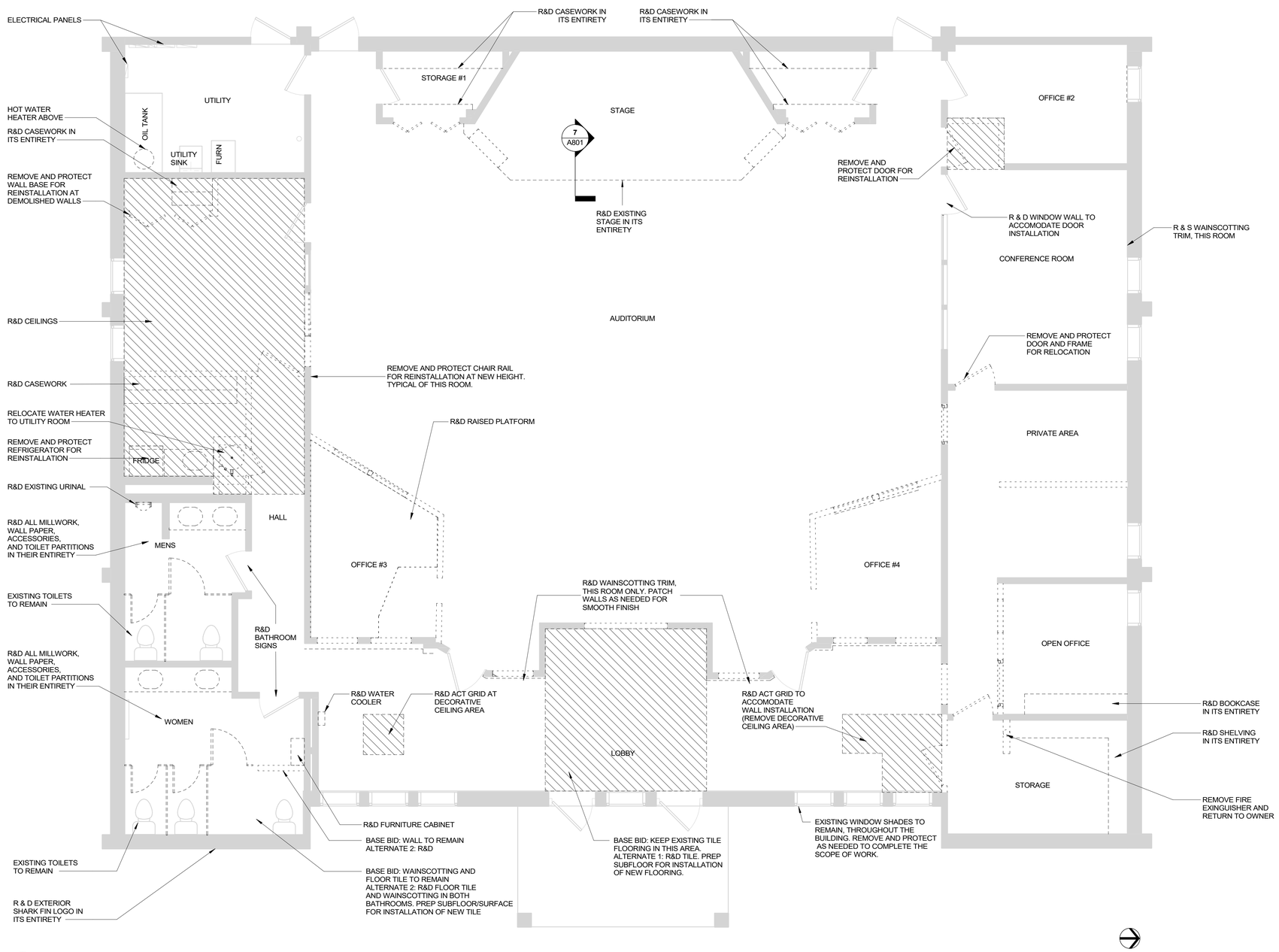

1 / D100 DEMOLITION PLAN
Scale: 1/4" = 1'-0"

DEMOLITION NOTES

1. PROVIDE TEMPORARY SUPPORT DURING REMOVAL OF ANY AND ALL STRUCTURAL ELEMENTS.
2. PROTECT ALL AREAS ADJACENT TO OR AFFECTED BY WORK DURING CONSTRUCTION. PROVIDE DUST CONTAINMENT FOR ALL WORK AREAS.
3. CLEAN WORK AREA AND AREAS AFFECTED BY CUTTING AND PATCHING OPERATIONS.
4. PATCH SURFACES WALLS & CEILING AT DEMO'D AREAS TO MATCH EXISTING ADJACENT SURFACES. PREPARE TO RECIEVE NEW CONSTRUCTION.
5. CAP ALL ABANDONED PLUMBING LINES AND ELECTRICAL OUTLETS.
6. ALL PORTIONS OF THE BUILDING TO BE REMOVED SHALL BE LEGALLY DISPOSED OF OFF-SITE UNLESS DIRECTED OTHERWISE.
7. PRECAUTIONS AND TEMPORARY SHORING SHALL BE PLACED TO MAINTAIN THE INTEGRITY OF THE EXISTING STRUCTURE THROUGHOUT DEMOLITION AND MASONRY WORK.
8. CONTRACTOR IS RESPONSIBLE FOR CONTACTING DIG SAFE AND ANY OTHER AUTHORITIES HAVING JURISDICTION PRIOR TO THE START OF DEMOLITION. COMPLY WITH GOVERNING CODES AND REGULATIONS. CONTRACTOR IS RESPONSIBLE FOR OBTAINING ALL NECESSARY PERMITS REQUIRED TO COMPLETE THE WORK.
9. PROVIDE WEATHER TIGHT TEMPORARY PROTECTION FOR ALL OPENINGS IN EXTERIOR WALLS, ROOF, AND AT WINDOW AND DOOR HEADS.
10. SHOULD SUSPECTED HAZARDOUS MATERIALS BE ENCOUNTERED, CONTRACTOR SHALL NOTIFY ARCHITECT AND OWNER IMMEDIATELY.
11. PROVIDE CUTTING AND PATCHING WORK TO PROPERLY COMPLETE THE WORK OF THE PROJECT, COMPLYING WITH PROJECT REQUIREMENTS FOR: a.) STRUCTURAL WORK; b.) MECHANICAL WORK; c.) VISUAL REQUIREMENTS, INCLUDING DETAILING AND TOLERANCES.
12. DO NOT CUT AND PATCH IN A MANNER THAT WOULD RESULT IN A FAILURE OF THE WORK TO PERFORM AS INTENDED, DECREASE ENERGY PERFORMANCE, INCREASE MAINTENANCE, DECREASE OPERATION LIFE, OR DECREASE SAFETY PERFORMANCE.
13. MATCH EXISTING MATERIALS FOR CUTTING AND PATCHING WORK WITH NEW MATERIALS CONFORMING TO PROJECT REQUIREMENTS.
14. INSPECT CONDITIONS PRIOR TO WORK TO IDENTIFY SCOPE AND TYPE OF WORK REQUIRED. NOTIFY OWNER OF WORK REQUIRING INTERRUPTION TO BUILDING SERVICES OR OWNER'S OPERATIONS.
15. CUTTING: USE CUTTING TOOLS, NOT CHOPPING TOOLS. MAKE NEAT HOLE. MINIMIZE DAMAGE TO ADJACENT WORK. INSPECT FOR CONCEALED UTILITIES AND STRUCTURE BEFORE CUTTING.
16. PATCHING: MAKE PATCHES, SEAMS, AND JOINTS DURABLE AND INCONSPICUOUS.
17. REFER TO A1 SHEETS FOR RELEVANT DIMENSIONS AND ADDITIONAL NOTES WHERE APPLICABLE.
18. REVIEW UNIQUE EXISTING CONDITIONS FOUND IN THE FIELD DURING DEMOLITION WITH ARCHITECT.
19. CONTRACTOR TO ARRANGE FOR DISCONNECT AND CAPPING OF UTILITIES AS REQUIRED. PROTECT UTILITIES TO REMAIN. VERIFY LOCATION AND STATUS OF UTILITIES BEFORE BEGINNING DEMOLITION WORK.
20. VERIFY WITH OWNER BEFORE STARTING WORK WHICH ITEMS ARE TO BE SALVAGED FOR THEIR USE. CAREFULLY REMOVE AND STORE SUCH ITEMS AS DIRECTED BY OWNER.
21. PROTECT ADJACENT AREAS AND STRUCTURES TO REMAIN. CONTRACTOR IS RESPONSIBLE FOR RESTORING ANY AREAS OR SURFACES WHICH ARE DAMAGED BY THE CONTRACTOR OR ANY OF HIS SUBCONTRACTORS DURING DEMOLITION.

DEMOLITION LEGEND

NTS

- INDICATES ITEM OR AREA TO BE REMOVED
- WALL STRUCTURE TO REMAIN, WALL FINISH TO BE REMOVED
- WALL TO BE REMOVED IN ITS ENTIRETY
- EXISTING DOOR & FRAME TO BE REMOVED
- EXISTING WINDOW AND FRAME TO BE REMOVED
- EXISTING CEILING TO BE REMOVED

DEMOLITION SCOPE NOTES

1. R&D ALL FLOORING IN ITS ENTIRETY, IN ALL SPACES UNLESS NOTED OTHERWISE. CONCRETE UTILITY ROOM FLOORING TO REMAIN.
2. EXISTING WALL BASE TO REMAIN. REMOVE AND PROTECT BASE, AS NEEDED FOR INFILL PURPOSES.
3. R&D ACT TILES ONLY IN ALL SPACES. EXISTING CEILING GRID TO REMAIN U.N.O.
4. ALL FURNITURE AND EQUIPMENT HAS BEEN REMOVED BY OWNER AND STORED.
5. R&D ANY EXISTING MATERIAL NEEDEED TO INSTALL MEP, INCLUDING, BUT NOT LIMITED TO, WALL BOARD TO ACCOMODATE ELECTRICAL, DATA, AND FIRE ALARM. CONDUITS RUN ON THE WALL ARE NOT ACCEPTABLE.

RENOVATIONS TO THE EXETER TOWN HALL

742 TEN ROD RD, EXETER, RI, 02822

BREWSTER THORNTON GROUP ARCHITECTS LLP
317 Iron Horse Way, Suite 202
Providence, RI 02908
401.861.1600
brewsterthornton.com

JOB NO. 2605
DATE 08/31/26

ISSUE : **BID DOCUMENTS**

NO.	REVISION DESCRIPTION	DATE

SHEET TITLE
DEMOLITION PLAN

SHEET
D100

8/31/2026 12:24:50 PM

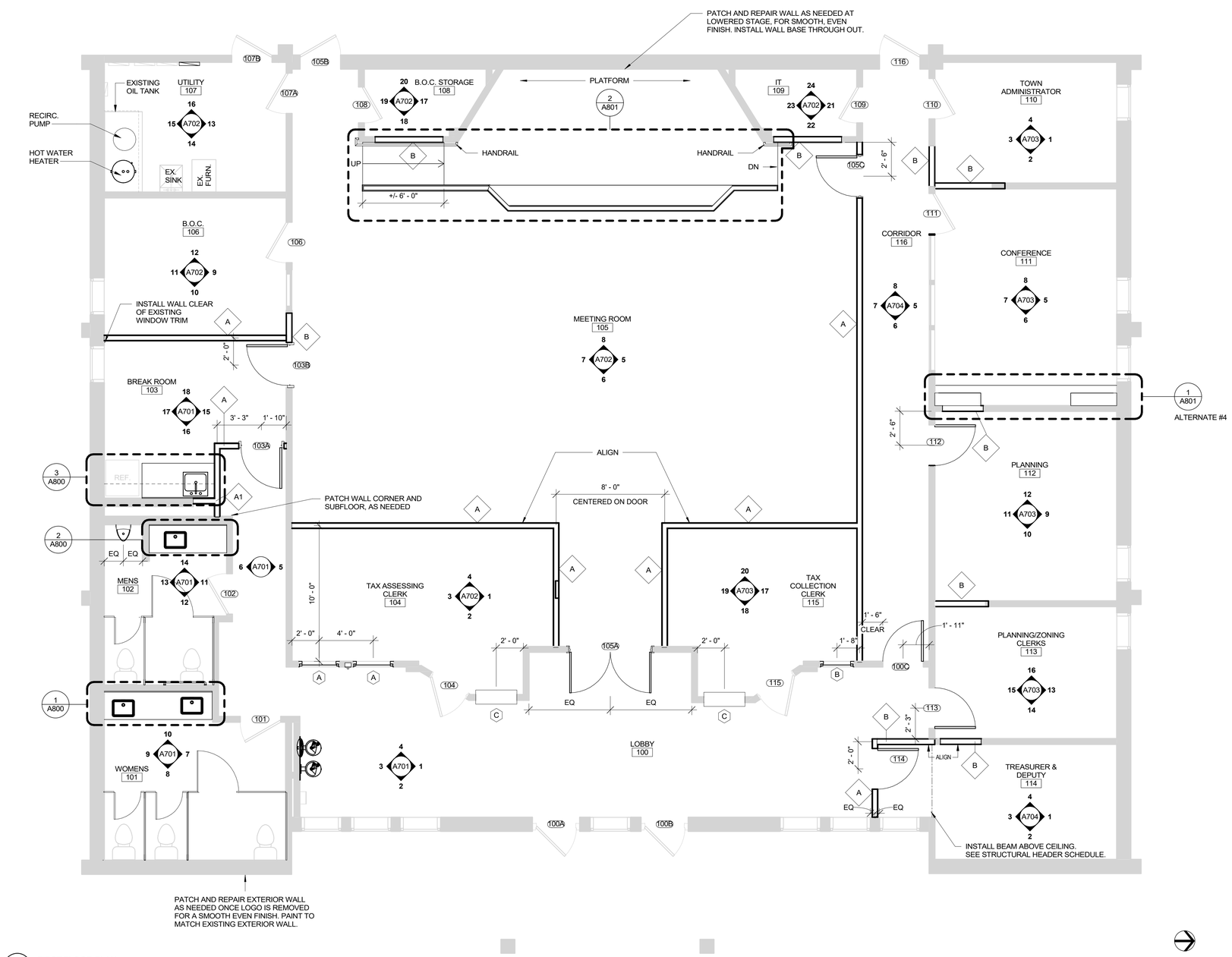

1 / A100 FIRST FLOOR PLAN
Scale: 1/4" = 1'-0"

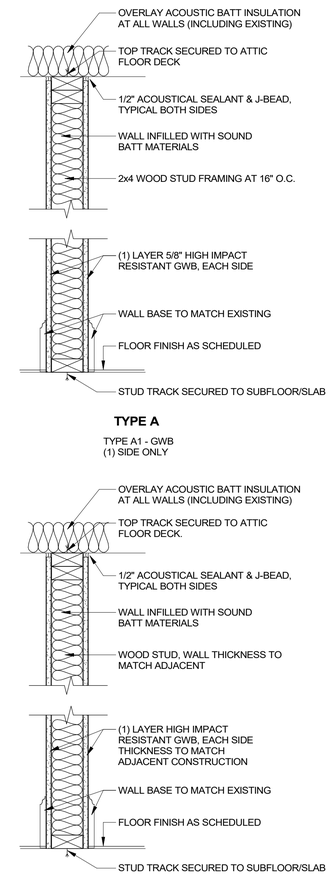

TYPE A

TYPE A1 - GWB
(1) SIDE ONLY

TYPE B

INFILL AT EXISTING WALLS

TYPICAL WALL TYPES
1 1/2" = 1'-0"

INTERIOR PARTITION NOTES

1. ALL PARTITIONS SHALL RECEIVE ACOUSTICAL BATT INSULATION UNLESS OTHERWISE NOTED.
2. PROVIDE ACOUSTICAL SEALANT AT TOP, BOTTOM, AND VERTICAL ENDS OF ALL PARTITIONS WHERE THEY ABUT DISSIMILAR MATERIALS.
3. REFER TO FINISH SCHEDULE, INTERIOR ELEVATIONS, DETAILS AND PARTITION TYPES FOR PARTITIONS WITH CERAMIC TILE.
4. FOR PARTITIONS DESIGNATED TO RECEIVE TILE REFER TO SPECIFICATIONS FOR APPROPRIATE SUBSTRATE. FOR ALL REMAINING WALLS IN AREAS RECEIVING CERAMIC TILE AND ALL BATHROOMS SUBSTRATE SHALL BE MOISTURE RESISTANT GWB.
5. ALL GWB ON PARTITIONS INDICATED TO BE FIRE-RATED. REFER TO PARTITION TYPES FOR UL DESIGNATION. SEE SPECIFICATIONS AND FINISH SCHEDULE FOR OTHER INFORMATION.
6. PARTITION TYPE INDICATES SIZE OF PARTITION ONLY. REFER TO SPECIFICATIONS FOR MINIMUM STUD SPACING, STEEL GAUGE AND ENGINEERING REQUIREMENTS.
7. PARTITIONS SHALL BE FIRE RATED AS INDICATED ON PLANS AND AS REQUIRED BY CODE. PROVIDE FIRE RATED GWB AND/OR CMU WHERE REQUIRED AND AS DETAILED TO ACHIEVE FIRE RATINGS INDICATED ON PLANS AND OR INTERIOR PARTITION TYPES.
8. REFER TO SPECIFICATIONS FOR ALL STUD BRACING REQUIREMENTS.
9. REFER TO SPECIFICATIONS FOR ALL ENGINEERING REQUIREMENTS FOR STUDS AND CMU.

GENERAL NOTES

1. PROTECT EXISTING FINISHES TO REMAIN.
2. INFILL WALLS AND CEILINGS AT DEMOLISHED AREAS TO MATCH EXISTING ADJACENT SURFACES.
3. FILL AND LEVEL FLOORS AT DEMOLISHED AREAS TO MATCH EXISTING ADJACENT SURFACES.
4. PATCH AND REPAIR ALL WALLS AND SURFACES AS NEEDED TO ACCOMMODATE CONSTRUCTION, INCLUDING, BUT NOT LIMITED TO INSTALLATION OF ELECTRICAL OUTLETS, DATA, AND SECURITY

RENOVATIONS TO THE EXETER TOWN HALL

742 TEN ROD RD, EXETER, RI, 02822

BREWSTER THORNTON GROUP ARCHITECTS LLP
317 Iron Horse Way, Suite 202
Providence, RI 02908
401.861.1600
brewsterthornton.com

JOB NO.	DATE
2605	08/31/26

ISSUE : **BID DOCUMENTS**

NO.	REVISION DESCRIPTION	DATE

SHEET TITLE
FLOOR PLAN AND WALL TYPES

SHEET
A100

8/31/2026 12:24:41 PM

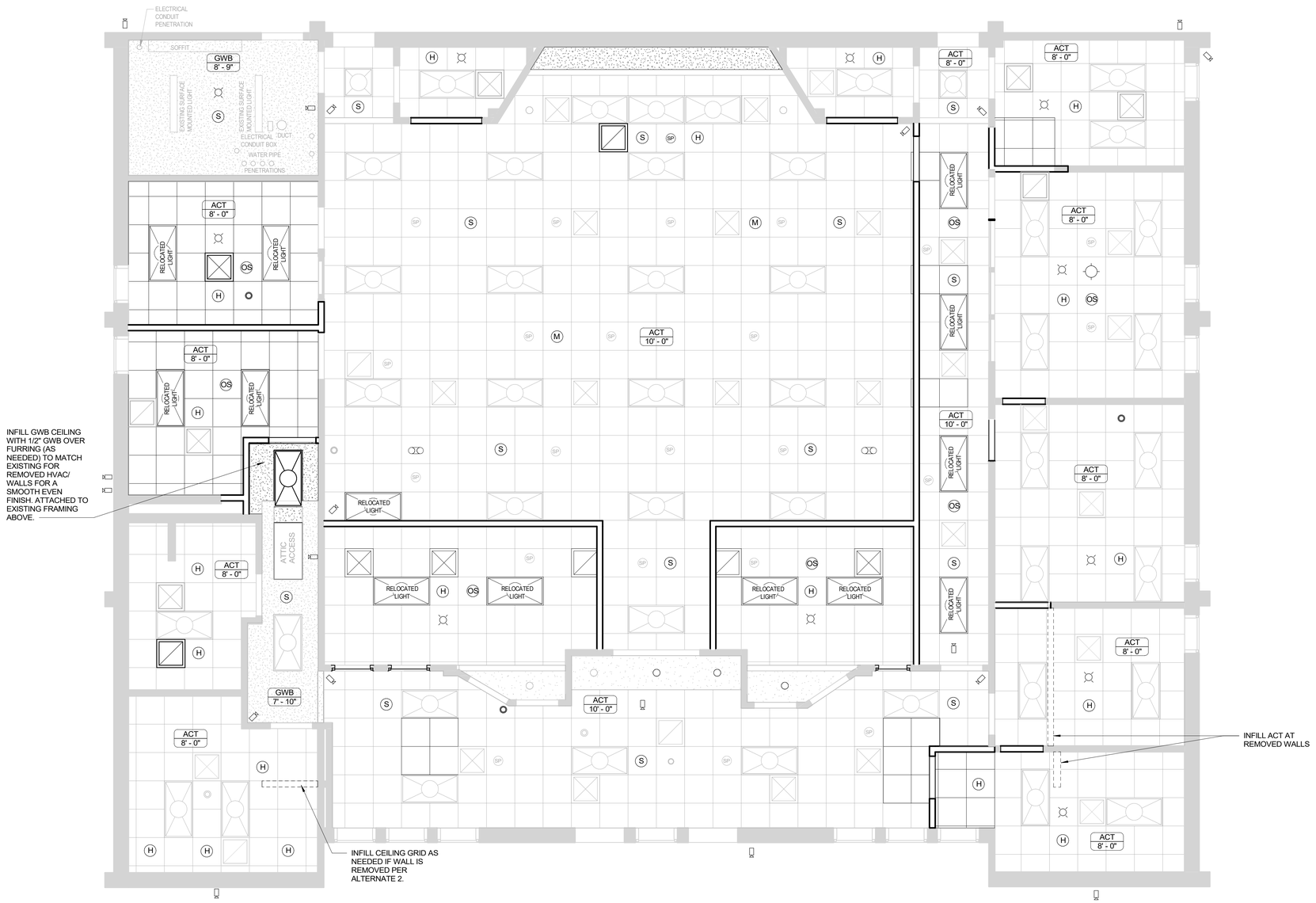

1 / A101 REFLECTED CEILING DEMOLITION PLAN
Scale: 1/4" = 1'-0"

RCP GENERAL NOTES

1. CONTRACTOR SHALL COORDINATE WITH ALL DISCIPLINES FOR SYSTEM EXTENTS & INSTALLATION. CONTRACTOR SHALL REFER TO ARCHITECTURAL DRAWINGS FOR COORDINATION OR EXACT LOCATIONS OF ALL DEVICES, LIGHT TRACKS, AND FIXTURES. OBTAIN ARCHITECT'S APPROVAL OF ALL CONDUIT, LIGHT TRACK, AND DEVICE LOCATIONS BEFORE INSTALLATION.
2. REPLACE ALL ACOUSTIC CEILING TILES IN EXISTING GRID
3. ALL LIGHT FIXTURES ARE CENTERED IN ROOM AND EQUALLY SPACED UNLESS OTHERWISE NOTED.
4. REFER TO MEP & FP DRAWINGS FOR ADDITIONAL INFORMATION FOR ALL FIXTURES, EQUIPMENT, AND DEVICES.
5. FIRE ALARM DEVICES & SPRINKLER HEADS SHOWN FOR LOCATION & COORDINATION PURPOSES ONLY. REFER TO FA &FP DRAWINGS FOR COMPLETE SYSTEMS.
6. ALL CEILING HEIGHTS ARE EXISTING U.N.O
7. COORDINATE MEP HEIGHTS TO ENSURE DOOR SWINGS & MILLWORK DO NOT CONFLICT. - V.I.F. W/ ARCHITECT.
8. REVIEW LAYOUT OF CEILING GRID WITH ARCHITECT PRIOR TO INSTALLATION.
9. INFILL EXISTING CIELING GRID AS NEEDED AT REMOVED WALLS, LIGHTING, AND BUILDING SYSTEMS.
10. INSTALL ACT PANELS IN EXISTING GRID. PAINT EXISTING AND INFILLED GRID IN ITS ENTIRETY.

    WHERE EXISTING CEILINGS ARE PATCHED OR MODIFIED AND AT AREAS OF NEW CONSTRUCTION, ADDITIONAL DEMOLITION AND CEILING WORK MAY BE REQUIRED THAT IS NOT SHOWN. PROVIDE ALL WORK NECESSARY FOR A COMPLETE, FINISHED INSTALLATION.

RCP LEGEND

REFER TO MEP PLANS FOR ADDITIONAL INFORMATION

	2'X2' ACOUSTIC CEILING TILE AND GRID
	GWB CEILING
	CEILING HVAC SUPPLY DIFFUSER
	CEILING HVAC RETURN GRILLE
H	HEAT DETECTOR
SP	SPEAKER
A-A X'-XX"	CEILING HEIGHT
	CEILING-MOUNT STROBE
S	CEILING MOUNTED SMOKE DETECTOR
OS	CEILING MOUNTED OCCUPANCY SENSOR
	SECURITY CAMERA
	CEILING MOUNTED SENSOR
	LIGHT FIXTURE
	EMERGENCY BATTERY UNIT
	CAN LIGHT
M	MICROPHONE

ADDITIONAL ATTIC SCOPE

INSTALL CONTINUOUS ROOF RAFTERS SUPPORTED AT THE EXTERIOR WALL AND THE INTERIOR BEARING WALL AT SEVEN (7) EXISTING TRUSSES WHERE PREVIOUS WORK CUT THE WEBS OUT TO ACCOMIDATE MECHANICAL UPGRADES. THE EXISTING CLEARENCES OVER THE AC UNITS LIMITS THE DEPTHS OF THE NEW RAFTERS TO APPROXIMETLY 6", THUS TWO (2) 1.75" x 6" LVLs MUST BE INSTALLED AT 24" O.C. THE RIDGE END OF THE LVLs SHOULD BE SUPPORTED ON A 2x6 LEDGER WHICH IS ATTACHED TO THE INTERIOR BEARING WALL. THE ENTIRE ROOF RAFTER ASSEMBLY (THE 3x4 TRUSS MEMBER, THE 2x6 SISTERED RAFTER. AND THE TWO (2) LVLs) SHOULD BE FASTENED TOGETHER WITH 8" TIMBERLOC SCREWS @ 24" O.C.

WHEN THE ATTIC STAIR WERE INSTALLED, TWO (2) ADDITIONAL TRUSSES WERE CUT. SISTER THESE TRUSSES WITH ONE (1) 1.75" x 9.5" LVL AND FASTEN TO THE EXISTING 2x4 TOP CORD.

RENOVATIONS TO THE EXETER TOWN HALL

742 TEN ROD RD, EXETER, RI, 02822

BREWSTER THORNTON GROUP ARCHITECTS LLP
317 Iron Horse Way, Suite 202
Providence, RI 02908
401.861.1600
brewsterthornton.com

JOB NO. 2605
DATE 08/31/26
ISSUE : BID DOCUMENTS

NO.	REVISION DESCRIPTION	DATE

SHEET TITLE
REFLECTED CEILING PLAN

SHEET
A101

8/31/2026 12:24:41 PM

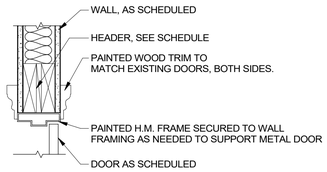

1 A600 DOOR HEAD DETAIL
Scale: 1 1/2" = 1'-0"

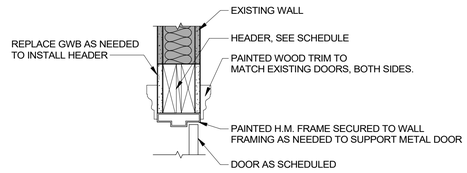

2 A600 DOOR HEAD DETAIL AT EXISTING WALL
Scale: 1 1/2" = 1'-0"

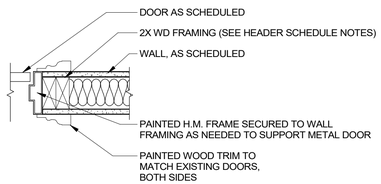

3 A600 DOOR JAMB DETAIL
Scale: 1 1/2" = 1'-0"

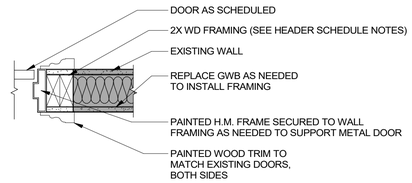

4 A600 DOOR JAMB DETAIL AT EXISTING TO BE RELOCATED
Scale: 1 1/2" = 1'-0"

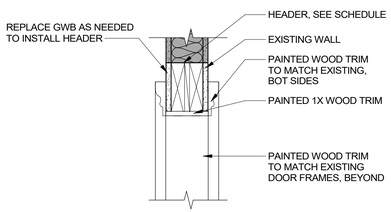

5 A600 TRANSACTION WINDOW HEAD DETAIL
Scale: 1 1/2" = 1'-0"

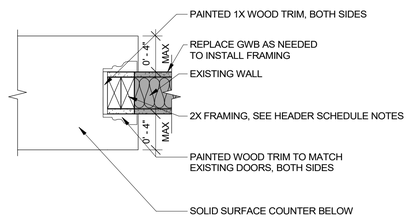

6 A600 TRANSACTION WINDOW JAMB DETAIL
Scale: 1 1/2" = 1'-0"

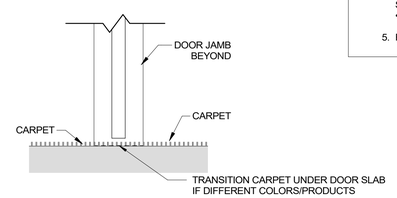

13 A600 CARPET TO CARPET TRANSITION DETAIL
Scale: 1 1/2" = 1'-0"

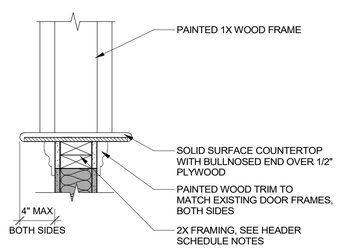

7 A600 TRANSACTION WINDOW SILL DETAIL
Scale: 1 1/2" = 1'-0"

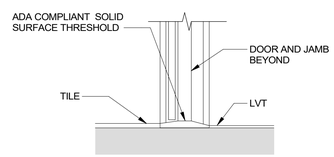

8 A600 LVT TO TILE TRANSITION DETAIL
Scale: 1 1/2" = 1'-0"

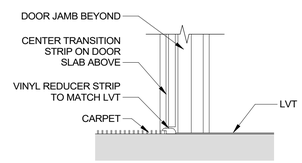

9 A600 LVT TO CARPET TRANSITION DETAIL
Scale: 1 1/2" = 1'-0"

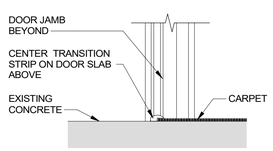

10 A600 CARPET TO EXISTING CONCRETE TRANSITION DETAIL
Scale: 1 1/2" = 1'-0"

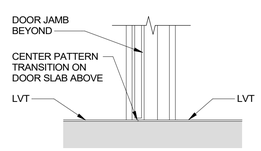

11 A600 LVT TO LVT TRANSITION DETAIL
Scale: 1 1/2" = 1'-0"

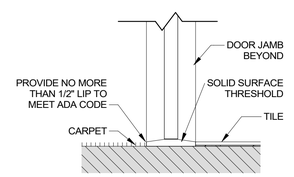

12 A600 CARPET TO TILE TRANSITION DETAIL
Scale: 1 1/2" = 1'-0"

DOOR SCHEDULE

DOOR NUMBER	DOOR TYPE	MATERIAL	WIDTH	HEIGHT	THICKNESS	FIRE RATING	FRAME MATERIAL	DETAILS HEAD	JAMB	SILL	HARDWARE	NOTES
100A	EXISTING	EXISTING	3' - 0"	7' - 0"	1 3/4"	N/A	EXISTING	EXISTING	EXISTING	EXISTING	07 / ALT 1	
100B	EXISTING	EXISTING	3' - 0"	7' - 0"	1 3/4"	N/A	EXISTING	EXISTING	EXISTING	EXISTING	04	
100C	A	HM	3' - 0"	6' - 8"	1 3/4"	N/A	HM	1/A600	3/A600	11/A600	02	
101	EXISTING	EXISTING	3' - 0"	6' - 8"	1 3/4"	N/A	EXISTING	EXISTING	EXISTING	8/A600	04	
102	EXISTING	EXISTING	3' - 0"	6' - 8"	1 3/4"	N/A	EXISTING	EXISTING	EXISTING	8/A600	04	
103A	A	HM	3' - 0"	6' - 8"	1 3/4"	N/A	HM	1/A600	3/A600	11/A600	01	
103B	B	HM	3' - 0"	6' - 8"	1 3/4"	N/A	HM	2/A600	4/A600	9/A600	02	
104	EXISTING	EXISTING	3' - 0"	6' - 8"	1 3/4"	N/A	EXISTING	EXISTING	EXISTING	9/A600	06	PROVIDE SHADE AT GLASS DOOR
105A	A	HM	6' - 0"	6' - 8"	1 3/4"	N/A	HM	2/A600	4/A600	9/A600 OR 12/A600	03	
105B	EXISTING	EXISTING	3' - 0"	6' - 8"	1 3/4"	N/A	EXISTING	EXISTING	EXISTING	EXISTING	08	
105C	A	HM	3' - 0"	6' - 8"	1 3/4"	N/A	HM	1/A600	3/A600	9/A600	02	
106	EXISTING	EXISTING	3' - 0"	6' - 8"	1 3/4"	N/A	EXISTING	EXISTING	EXISTING	12/A600	09	
107A	EXISTING	EXISTING	3' - 0"	6' - 8"	1 3/4"	N/A	EXISTING	EXISTING	EXISTING	10/A600	09	
107B	EXISTING	EXISTING	3' - 0"	6' - 8"	1 3/4"	N/A	EXISTING	EXISTING	EXISTING	EXISTING	04	
108	EXISTING DUTCH	EXISTING	2' - 8"	6' - 8"	1 3/4"	N/A	EXISTING	EXISTING	EXISTING	12/A600	09	
109	EXISTING DUTCH	EXISTING	2' - 8"	6' - 8"	1 3/4"	N/A	EXISTING	EXISTING	EXISTING	9/A600	09	
110	EXISTING	EXISTING	3' - 0"	6' - 8"	1 3/4"	N/A	EXISTING	EXISTING	EXISTING	9/A600	06	
111	EXISTING	EXISTING	3' - 0"	6' - 8"	1 3/4"	N/A	EXISTING	2/A600	4/A600	9/A600	05	EXISTING DOOR TO BE RELOCATED.
112	B	HM	3' - 0"	6' - 8"	1 3/4"	N/A	HM	2/A600	4/A600	9/A600	01	
113	C	HM	3' - 0"	6' - 8"	1 3/4"	N/A	HM	2/A600	4/A600	9/A600	01	
114	A	HM	3' - 0"	6' - 8"	1 3/4"	N/A	HM	1/A600	3/A600	9/A600	01	
115	EXISTING	EXISTING	3' - 0"	6' - 8"	1 3/4"	N/A	EXISTING	EXISTING	EXISTING	9/A600	06	PROVIDE SHADE AT GLASS DOOR
116	EXISTING	EXISTING	3' - 0"	6' - 8"	1 3/4"	N/A	EXISTING	EXISTING	EXISTING	EXISTING	08	

TYPICAL WALL HEADER SCHEDULE

ROUGH OPENING	WOOD HEADER
UP TO 3'-6" WIDE	(2)-2x8 IN 2X4 WALLS (3)- 2x8 in 2x6 WALLS WITH SINGLE JACK STUD BRG. @ EA. JAMB W/ PLYWOOD SPACER
OVER 3'-6" UP TO 5'-0" WIDE	(3)-2x10 WITH SINGLE JACK STUD BRG. @ EA. JAMB
OVER 5'-0" UP TO 8'-0" WIDE	(3)-2x12 WITH SINGLE JACK STUD BRG. @ EA. JAMB
OVER 8'-0" UP TO 12'-0" WIDE	5 1/4 x 11 7/8 LVL WITH 5 1/4" SQ. PSL @ EA. JAMB

NOTES: .
1. PROVIDE PLYWOOD SPACERS IN ALL MULTIPLE 2x HEADERS WITHIN 2x6 EXTERIOR AND/OR LOD BEARING WALLS TO MAKE UP DIFFERENCE OF WALL THICKNESS.
2. FASTEN MULTIPLE 2x HEADERS TOGETHER AS REQUIRED BY NATIONAL DESIGN SPECIFICATIONS FOR MEMBER TO ACT AS ONE.
3. U.N.O. PROVIDE A MINIMUM OF (1) KING STUD ADJACENT TO JACK STUDS @ EA. JAMB.
4. U.N.O. THE MINIMUM NUMBER OF STUDS @ EA JAMB SHALL EQUAL 1/2 THE QUANTITY OF WALL STUDS INTERRUPTED BY THE OPENING. ADD ADDITIONAL KING STUDS IN COMBINATION WITH THE REQUIRED JACK STUDS FROM THE SCHEDULE TO ACHIEVE MINIMUM REQUIRED STUDS @ EA. JAMB.
   - EXAMPLE - AN 8'-0" WIDE OPENING IN A WALL WITH STUDS SPACED @ 1'-0" O.C. WOULD REQUIRE A MINIMUM OF (4) STUDS @ EA. JAMB. (2) JACK STUDS PER SCHEDULE + (2) KING STUDS.
5. FASTEN THE BUILT-UP KING AND JACK STU PACK TOGETHER AS REQUIRED BY NDS FOR MEMBER TO ACT AS ONE.

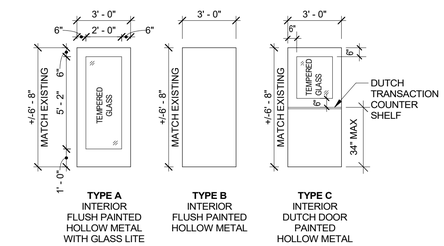

TYPE A
INTERIOR
FLUSH PAINTED
HOLLOW METAL
WITH GLASS LITE

TYPE B
INTERIOR
FLUSH PAINTED
HOLLOW METAL

TYPE C
INTERIOR
DUTCH DOOR
PAINTED
HOLLOW METAL

PROVIDE INTERIOR SHADE

PROVIDE INTERIOR SHADE

DOOR TYPE LEGEND
1/4" = 1'-0"

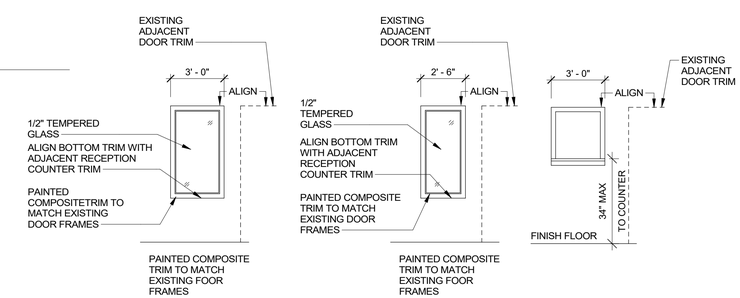

TYPE A
MILLWORK
WINDOW

TYPE B
MILLWORK
WINDOW

TYPE C
MILLWORK
TRANSACTION
WINDOW

PROVIDE INTERIOR SHADE

PROVIDE INTERIOR SHADE

WINDOW SCHEDULE
1/4" = 1'-0"

RENOVATIONS TO THE EXETER TOWN HALL

742 TEN ROD RD, EXETER, RI, 02822

BREWSTER THORNTON GROUP ARCHITECTS LLP
317 Iron Horse Way,
Suite 202
Providence, RI 02908

401.861.1600
brewsterthornton.com

JOB NO. 2605
DATE 08/31/26

ISSUE : **BID DOCUMENTS**

NO.	REVISION DESCRIPTION	DATE

SHEET TITLE
DOORS AND WINDOWS

SHEET
A600

8/31/2026 12:24:42 PM

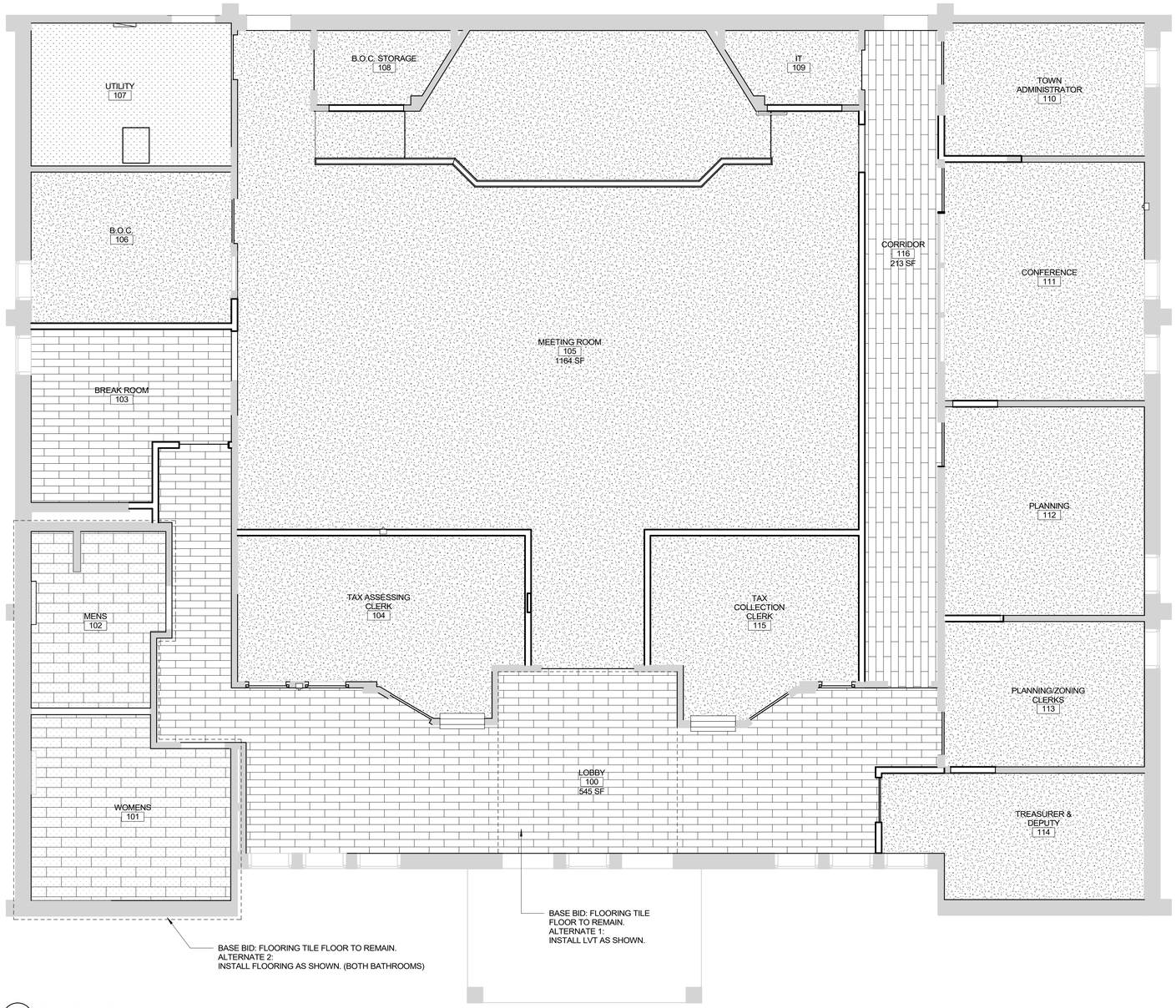

1 / A700 FINISH FLOOR PLAN
Scale: 1/4" = 1'-0"

FINISH SCHEDULE

ROOM #	NAME	FLOOR	WALLS BASE	NORTH	EAST	SOUTH	WEST	CEILING
100	LOBBY	LVT	PAINTED WOOD	PNT-3	PNT-3	PNT-3	PNT-3	ACT/GWB (PNT-1)
101	WOMENS	TILE	TILE	PNT-4	TILE	PT-4	TILE/PNT-4	ACT
102	MENS	TILE	TILE	PNT-4	TILE	PT-4	TILE/PNT-4	ACT
103	BREAK ROOM	LVT	PAINTED WOOD	PNT-2	PNT-2	PNT-2	PNT-2	ACT
104	TAX ASSESSING CLERK	CPT	PAINTED WOOD	PNT-2	PNT-2	PNT-2	PNT-2	ACT
105	MEETING ROOM	CPT	PAINTED WOOD	PNT-3	PNT-3	PNT-3	PNT-3	ACT
106	B.O.C.	CPT	PAINTED WOOD	PNT-2	PNT-2	PNT-2	PNT-2	ACT
107	UTILITY	EXISTING CONCRETE	N/A	PNT-2	PNT-2	PNT-2	PNT-2	GWB (PNT-1)
108	B.O.C. STORAGE	LVT	PAINTED WOOD	PNT-2	PNT-2	PNT-2	PNT-2	ACT
109	IT	LVT	PAINTED WOOD	PNT-2	PNT-2	PNT-2	PNT-2	ACT
110	TOWN ADMINISTRATOR	CPT	PAINTED WOOD	PNT-2	PNT-2	PNT-2	PNT-2	ACT
111	CONFERENCE	CPT	PAINTED WOOD	WALLPAPER	WALLPAPER	WALLPAPER	WALLPAPER	ACT
112	PLANNING	CPT	PAINTED WOOD	PNT-2	PNT-2	PNT-2	PNT-2	ACT
113	PLANNING/ZONING CLERKS	CPT	PAINTED WOOD	PNT-2	PNT-2	PNT-2	PNT-2	ACT
114	TREASURER & DEPUTY	CPT	PAINTED WOOD	PNT-2	PNT-2	PNT-2	PNT-2	ACT
115	TAX COLLECTION CLERK	CPT	PAINTED WOOD	PNT-2	PNT-2	PNT-2	PNT-2	ACT
116	CORRIDOR	CPT	PAINTED WOOD	PNT-2	PNT-2	PNT-2	PNT-2	ACT

FLOOR FINISH LEGEND

- LVT
- TILE
- CARPET
- EXISTING CONCRETE

NOTES

1. FINISH FLOORING TO EXTEND UNDER ALL CASEWORK
2. FLOOR PATTERNS TO BE INSTALLED CENTERED ON SPACES WITH NOT LESS THAN HALF A CARPET TILE ON EITHER END, UNLESS NOTED OTHERWISE. REVIEW IN FIELD WITH ARCHITECT.
3. EXISTING COMPOSITE WALL BASE TO BE REUSED WHEN POSSIBLE. MATCH EXISTING AT NEW SPACES/AREAS OF INFILL.
4. SAND, PATCH, AND REPAINT ALL EXISTING TRIM, WALL BASE, DOORS, ETC.
5. PAINTING SCHEDULE:
   - PNT-1 CEILING/SOFFIT COLOR (INCLUDING ACT GRID)
   - PNT-2 OFFICE WALL COLOR
   - PNT-3 MEETING ROOM/LOBBY WALL COLOR
   - PNT-4 BATHROOM WALL COLOR
   - PNT-5 TRIM/DOOR COLOR/BASE
6. PATCH ALL EXISTING INTERIOR WALLS AND SURFACES AS NEEDED FOR SMOOTH, EVEN FINISH, INCLUDING, BUT NOT LIMITED TO, AREAS OF EXISTING DAMAGE AND REMOVED BUILDING SYSTEMS.
7. FINISHES APPLY TO BOTH NEW AND EXISTING SURFACES.

RENOVATIONS TO THE
EXETER TOWN HALL
742 TEN ROD RD, EXETER, RI, 02822

BREWSTER THORNTON GROUP ARCHITECTS LLP
317 Iron Horse Way,
Suite 202
Providence, RI 02908

401.861.1600
brewsterthornton.com

JOB NO. 2605
DATE 08/31/26
ISSUE : BID DOCUMENTS

NO.	REVISION DESCRIPTION	DATE

SHEET TITLE
FINISH FLOOR PLAN

SHEET
A700

8/31/2026 12:24:43 PM

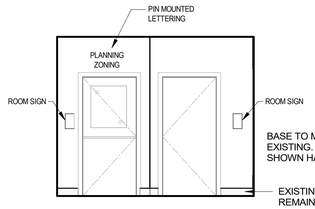

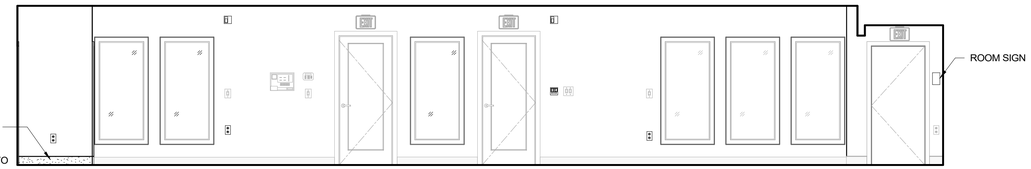

1 A701 LOBBY (100) - NORTH ELEVATION
Scale: 1/4" = 1'-0"

2 A701 LOBBY (100) - EAST ELEAVTION
Scale: 1/4" = 1'-0"

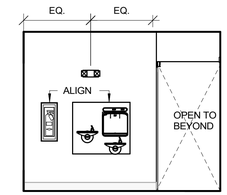

3 A701 LOBBY (100) - SOUTH ELEVATION
Scale: 1/4" = 1'-0"

HEIGHTS OF DEVICES, U.N.O.

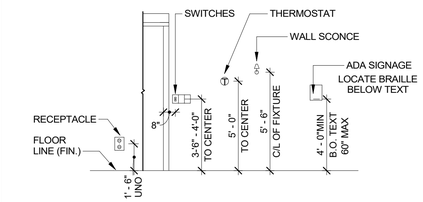

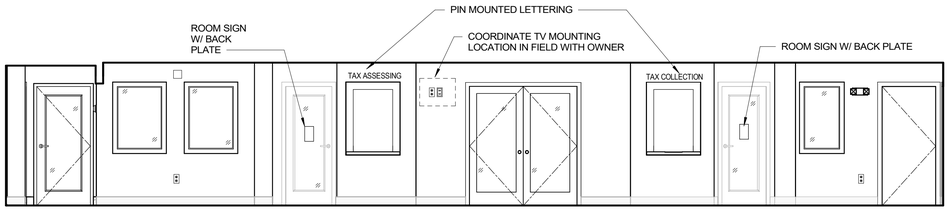

4 A701 LOBBY (100) - WEST ELEAVTION
Scale: 1/4" = 1'-0"

5 A701 LOBBY (100) - CORRIDOR NORTH ELEVATION
Scale: 1/4" = 1'-0"

PLUMBING AND ACCESSORIES MOUNTING HEIGHT LEGEND

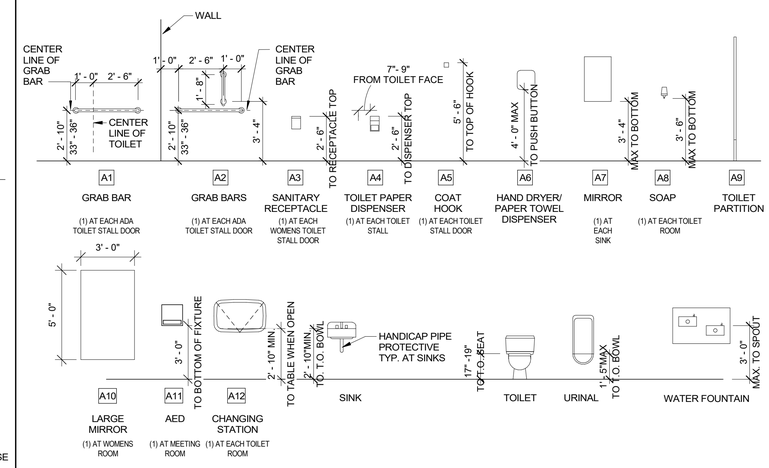

SEE SPECIFICATION FOR ADDITIONAL ACCESSORY INFORMATION. REFER TO PLUMBING DRAWINGS FOR FIXTURE INFORMATION.

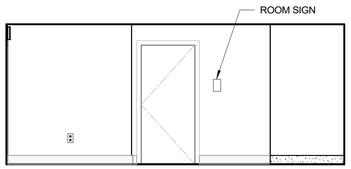

6 A701 LOBBY (100) - CORRIDOR SOUTH ELEVATION
Scale: 1/4" = 1'-0"

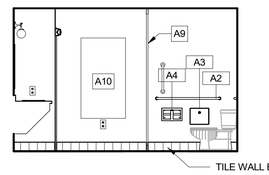

7 A701 WOMENS (101) - NORTH ELEVATION (SHOWN AS ALTERNATE)
Scale: 1/4" = 1'-0"

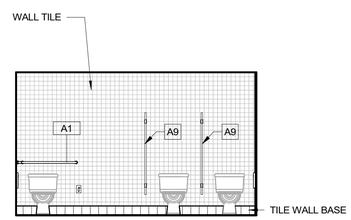

NOTE: ALL WALL TILE TO BE CENTERED ON WALL U.N.O.

8 A701 WOMENS (101) - EAST ELEVATION (SHOWN AS ALTERNATE)
Scale: 1/4" = 1'-0"

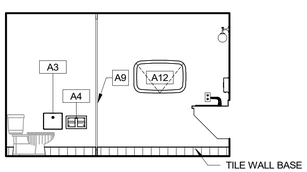

9 A701 WOMENS (101) - SOUTH ELEVATION (SHOWN AS ALTERNATE)
Scale: 1/4" = 1'-0"

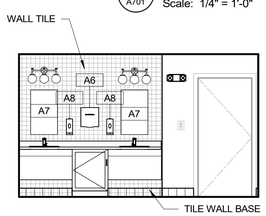

10 A701 WOMENS (101) - WEST ELEVATION (SHOWN AS ALTERNATE)
Scale: 1/4" = 1'-0"

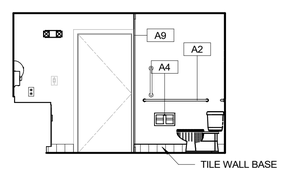

11 A701 MENS (102) - NORTH ELEVATION (SHOWN AS ALTERNATE)
Scale: 1/4" = 1'-0"

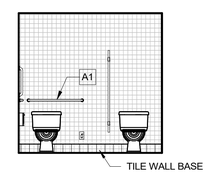

12 A701 MENS (102) - EAST ELEVATION (SHOWN AS ALTERNATE)
Scale: 1/4" = 1'-0"

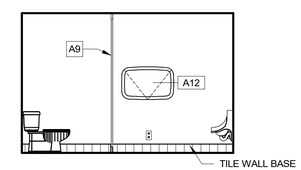

13 A701 MENS (102) - SOUTH ELEVATION (SHOWN AS ALTERNATE)
Scale: 1/4" = 1'-0"

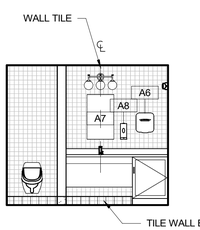

14 A701 MENS (102) - WEST ELEVATION (SHOWN AS ALTERNATE)
Scale: 1/4" = 1'-0"

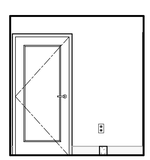

15 A701 BREAK ROOM (103) - NORTH ELEVATION
Scale: 1/4" = 1'-0"

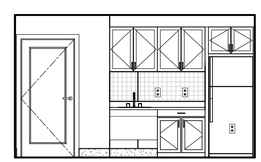

16 A701 BREAK ROOM (103) - EAST ELEVATION
Scale: 1/4" = 1'-0"

17 A701 BREAK ROOM (103) - SOUTH ELEVATION
Scale: 1/4" = 1'-0"

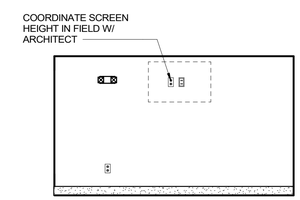

18 A701 BREAK ROOM (103) - WEST ELEVATION
Scale: 1/4" = 1'-0"

RENOVATIONS TO THE EXETER TOWN HALL

742 TEN ROD RD, EXETER, RI, 02822

BREWSTER THORNTON GROUP ARCHITECTS LLP
317 Iron Horse Way, Suite 202
Providence, RI 02908
401.861.1600
brewsterthornton.com

JOB NO.	DATE
2605	08/31/26

ISSUE : **BID DOCUMENTS**

NO.	REVISION DESCRIPTION	DATE

SHEET TITLE
INTERIOR ELEVATIONS

SHEET
A701

8/31/2026 12:24:45 PM

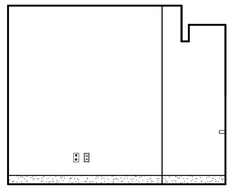

1 A702 TAX ASSESSING CLERK (104) - NORTH ELEVATION
Scale: 1/4" = 1'-0"

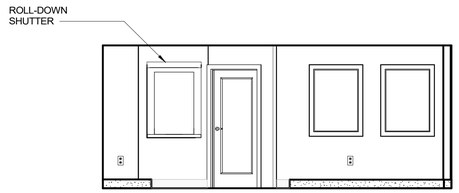

2 A702 TAX ASSESSING CLERK (104) - EAST ELEVATION
Scale: 1/4" = 1'-0"

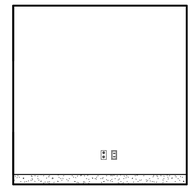

3 A702 TAX ASSESSING CLERK (104) - SOUTH ELEVATION
Scale: 1/4" = 1'-0"

4 A702 TAX ASSESSING CLERK (104) - WEST ELEVATION
Scale: 1/4" = 1'-0"

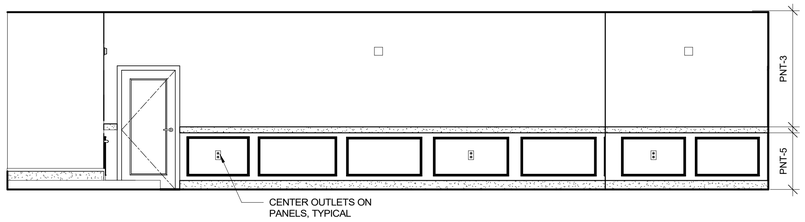

5 A702 MEETING ROOM (105) - NORTH ELEVATION
Scale: 1/4" = 1'-0"

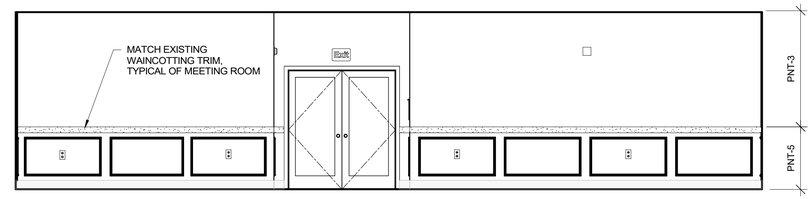

6 A702 MEETING ROOM (105) - EAST ELEVATION
Scale: 1/4" = 1'-0"

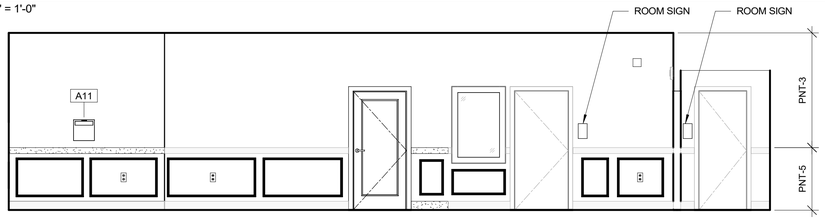

7 A702 MEETING ROOM (105) - SOUTH ELEVATION
Scale: 1/4" = 1'-0"

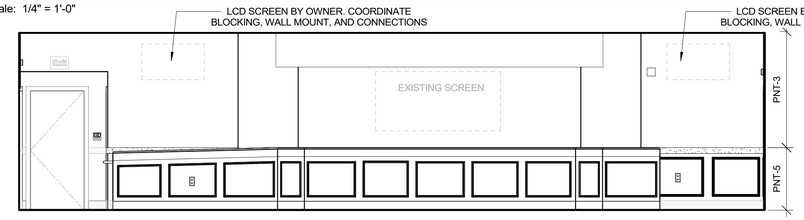

8 A702 MEETING ROOM (105) - WEST ELEVATION
Scale: 1/4" = 1'-0"

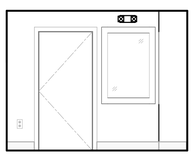

9 A702 B.O.C. (106) - NORTH ELEVATION
Scale: 1/4" = 1'-0"

10 A702 B.O.C. (106) - EAST ELEVATION
Scale: 1/4" = 1'-0"

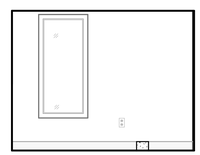

11 A702 B.O.C. (106) - SOUTH ELEVATION
Scale: 1/4" = 1'-0"

12 A702 B.O.C. (106) - WEST ELEVATION
Scale: 1/4" = 1'-0"

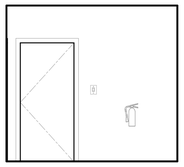

13 A702 UTILITY (107) - NORTH ELEVATION
Scale: 1/4" = 1'-0"

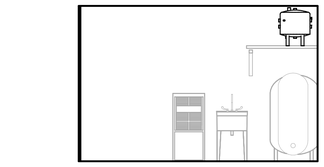

14 A702 UTILITY (107) - EAST ELEVATION
Scale: 1/4" = 1'-0"

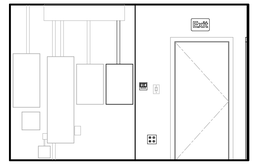

15 A702 UTILITY (107) - SOUTH ELEVATION
Scale: 1/4" = 1'-0"

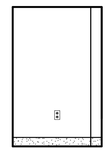

16 A702 UTILITY (107) - WEST ELEVATION
Scale: 1/4" = 1'-0"

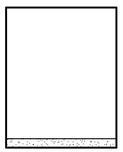

17 A702 B.O.C. STORAGE (107) - NORTH
Scale: 1/4" = 1'-0"

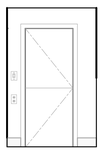

18 A702 B.O.C. STORAGE (107) - EAST
Scale: 1/4" = 1'-0"

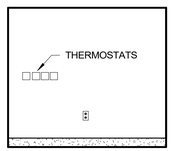

19 A702 B.O.C. STORAGE (107) - SOUTH
Scale: 1/4" = 1'-0"

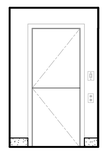

20 A702 B.O.C. STORAGE (107) - WEST
Scale: 1/4" = 1'-0"

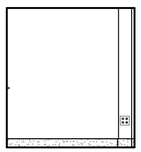

21 A702 IT (109) - NORTH ELEVATION
Scale: 1/4" = 1'-0"

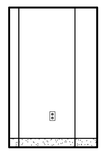

22 A702 IT (109) - EAST ELEVATION
Scale: 1/4" = 1'-0"

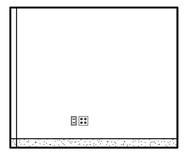

23 A702 IT (109) - SOUTH ELEVATION
Scale: 1/4" = 1'-0"

24 A702 IT (109) - WEST ELEVATION
Scale: 1/4" = 1'-0"

RENOVATIONS TO THE EXETER TOWN HALL

742 TEN ROD RD, EXETER, RI, 02822

BREWSTER THORNTON GROUP ARCHITECTS LLP
317 Iron Horse Way,
Suite 202
Providence, RI 02908

401.861.1600
brewsterthornton.com

JOB NO.	DATE
2605	08/31/26

ISSUE : **BID DOCUMENTS**

NO.	REVISION DESCRIPTION	DATE

SHEET TITLE
INTERIOR ELEVATIONS

SHEET
A702

8/31/2026 12:24:46 PM

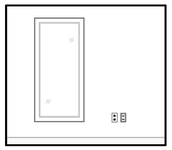

1 A703 OFFICE (110) - NORTH ELEVATION
Scale: 1/4" = 1'-0"

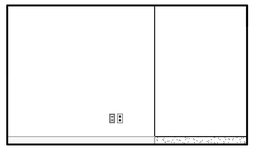

2 A703 OFFICE (110) - EAST ELEVATION
Scale: 1/4" = 1'-0"

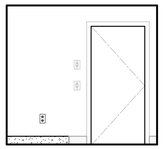

3 A703 OFFICE (110) - SOUTH ELEVATION
Scale: 1/4" = 1'-0"

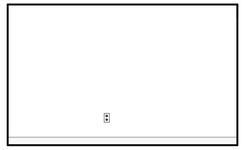

4 A703 OFFICE (110) - WEST ELEVATION
Scale: 1/4" = 1'-0"

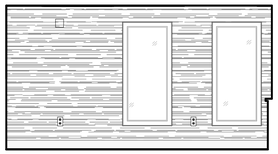

5 A703 CONFERENCE (111) - NORTH ELEVATION
Scale: 1/4" = 1'-0"

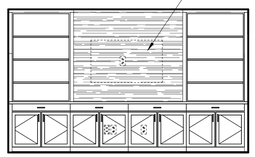

6 A703 CONFERENCE (111) - EAST ELEVATION
Scale: 1/4" = 1'-0"

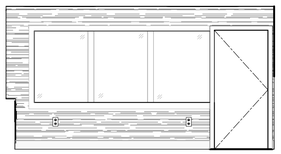

7 A703 CONFERENCE (111) - SOUTH ELEVATION
Scale: 1/4" = 1'-0"

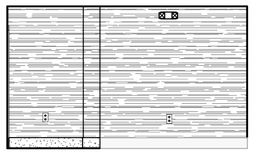

8 A703 CONFERENCE (111) - WEST ELEVATION
Scale: 1/4" = 1'-0"

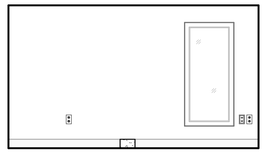

9 A703 PLANNING (112) - NORTH ELEVATION
Scale: 1/4" = 1'-0"

10 A703 PLANNING (112) - EAST ELEVATION
Scale: 1/4" = 1'-0"

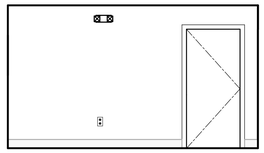

11 A703 PLANNING (112) - SOUTH ELEVATION
Scale: 1/4" = 1'-0"

12 A703 PLANNING (112) - WEST ELEVATION
Scale: 1/4" = 1'-0"

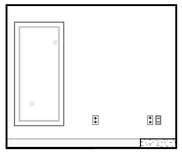

13 A703 PLANNING/CLERK (113) - NORTH ELEVATION
Scale: 1/4" = 1'-0"

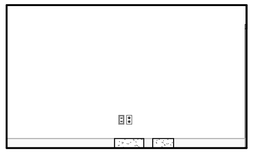

14 A703 PLANNING/CLERK (113) - EAST ELEVATION
Scale: 1/4" = 1'-0"

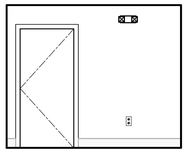

15 A703 PLANNING/CLERK (113) - SOUTH ELEVATION
Scale: 1/4" = 1'-0"

16 A703 PLANNING/CLERK (113) - WEST ELEVATION
Scale: 1/4" = 1'-0"

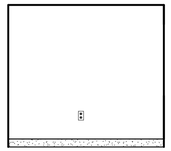

17 A703 TAX COLLECTION CLERK (115) -NORTH ELEVATION
Scale: 1/4" = 1'-0"

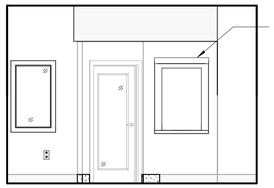

18 A703 TAX COLLECTION CLERK (115) - EAST ELEVATION
Scale: 1/4" = 1'-0"

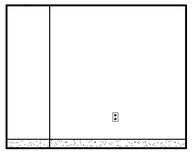

19 A703 TAX COLLECTION CLERK (115) - SOUTH ELEVATION
Scale: 1/4" = 1'-0"

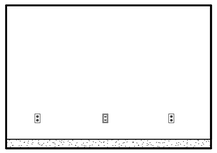

20 A703 TAX COLLECTION CLERK (115) - WEST ELEVATION
Scale: 1/4" = 1'-0"

RENOVATIONS TO THE
EXETER TOWN HALL
742 TEN ROD RD, EXETER, RI, 02822

BREWSTER THORNTON GROUP ARCHITECTS LLP
317 Iron Horse Way,
Suite 202
Providence, RI 02908

401.861.1600
brewsterthornton.com

JOB NO.	DATE
2605	08/31/26

ISSUE : BID DOCUMENTS

NO.	REVISION DESCRIPTION	DATE

SHEET TITLE
INTERIOR ELEVATIONS

SHEET
A703

8/31/2026 12:24:47 PM

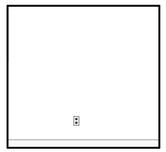

1 A704 TREASURER & DEPUTY (114) - NORTH ELEVATION
Scale: 1/4" = 1'-0"

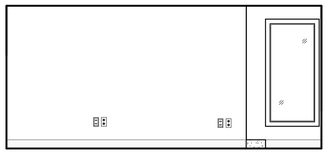

2 A704 TREASURER & DEPUTY (114) - EAST ELEVATION
Scale: 1/4" = 1'-0"

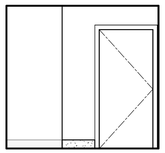

3 A704 TREASURER & DEPUTY (114) - SOUTH ELEVATION
Scale: 1/4" = 1'-0"

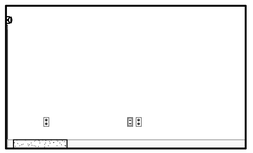

4 A704 TREASURER & DEPUTY (114) - WEST ELEVATION
Scale: 1/4" = 1'-0"

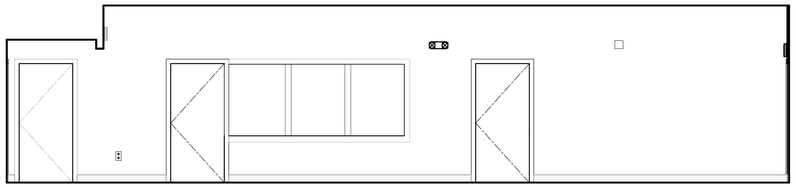

5 A704 CORRIDOR (116) - NORTH ELEVATION
Scale: 1/4" = 1'-0"

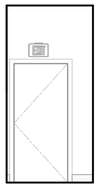

6 A704 CORRIDOR (116) - EAST ELEVATION
Scale: 1/4" = 1'-0"

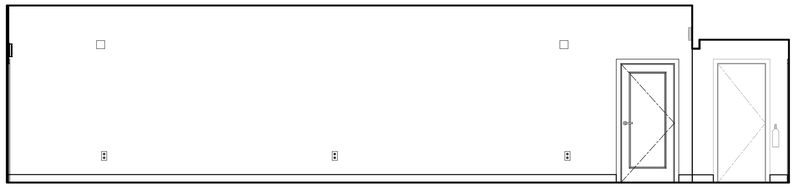

7 A704 CORRIDOR (116) - SOUTH ELEVATION
Scale: 1/4" = 1'-0"

8 A704 CORRIDOR (116) - WEST ELEVATION
Scale: 1/4" = 1'-0"

RENOVATIONS TO THE EXETER TOWN HALL

742 TEN ROD RD, EXETER, RI, 02822

BREWSTER THORNTON GROUP ARCHITECTS LLP

317 Iron Horse Way,
Suite 202
Providence, RI 02908

401.861.1600
brewsterthornton.com

JOB NO.	DATE
2605	08/31/26

ISSUE : **BID DOCUMENTS**

NO.	REVISION DESCRIPTION	DATE

SHEET TITLE
INTERIOR ELEVATIONS

SHEET
A704

8/31/2026 12:24:48 PM

GENERAL MILLWORK NOTES

1. CONTRACTOR SHALL VERIFY EXISTING FIELD DIMENSIONS AND COORDINATE WITH THE ARCHITECT ON THE METHODOLOGY OF MAKING NECESSARY DETAIL ADJUSTMENTS.
2. CABINET DETAILS PROVIDED IN THE DRAWINGS ARE INTENDED TO CONVEY AN OVERALL AND GENERAL UNDERSTANDING OF THE APPROX. SIZE, HEIGHT, CONFIGURATION, SURFACE MATERIALS, AND SURFACE TREATMENTS OF THE CABINETS. THE CONSTRACTOR SHALL MEET WITH THE ARCHITECT TO REVIEW VARIOUS ISSUES RELATED TO FABRICATION DETAILING THAT HAVE BEEN IDENTIFIED BY THE CONTRACTOR AND TO CONFIRM THE CONTRACTOR'S INTERPRETATION OF THE REQUIREMENTS.
3. CONTRACTOR TO PROVIDE BLOCKING IN WALL AS REQUIRED FOR ATTACHMENT OF MILLWORK.

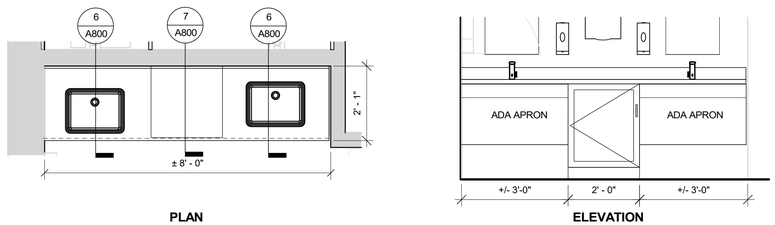

1 / A800 WOMENS ROOM MILLWORK
Scale: 1/2" = 1'-0"

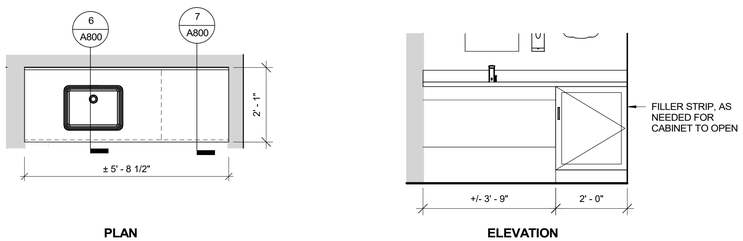

2 / A800 MENS ROOM MILLWORK
Scale: 1/2" = 1'-0"

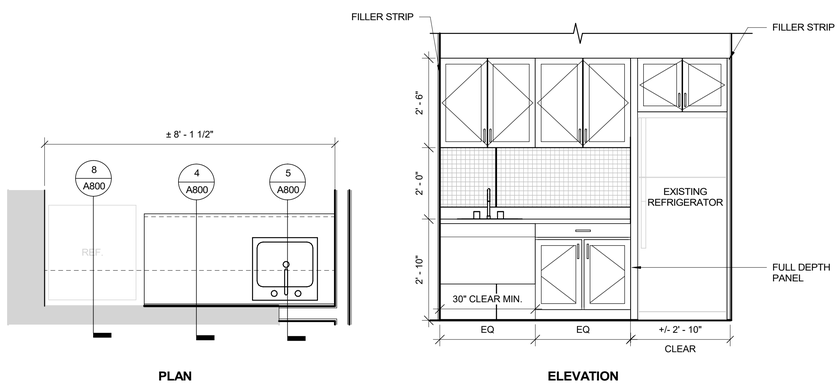

3 / A800 BREAK ROOM MILLWORK
Scale: 1/2" = 1'-0"

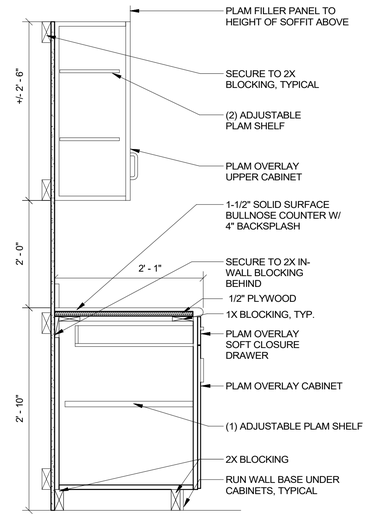

4 / A800 KITCHEN CABINET SECTION
Scale: 1" = 1'-0"

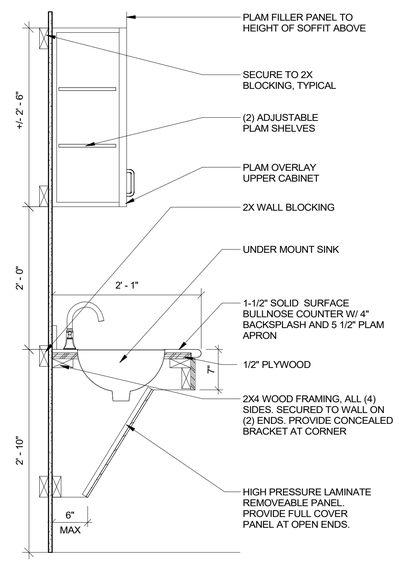

5 / A800 KITCHEN SINK SECTION
Scale: 1" = 1'-0"

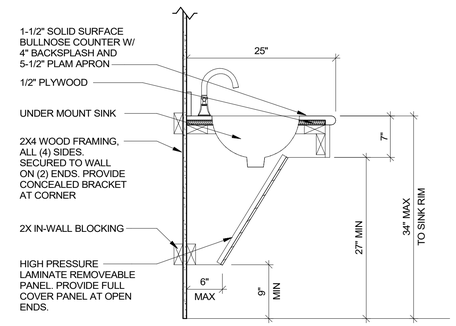

6 / A800 ADA SINK SECTION
Scale: 1" = 1'-0"

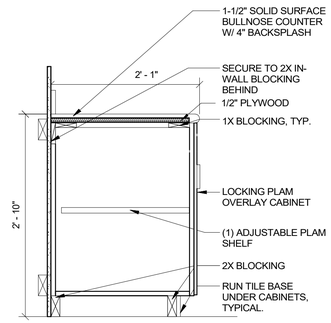

7 / A800 LAVATORY CABINET SECTION
Scale: 1" = 1'-0"

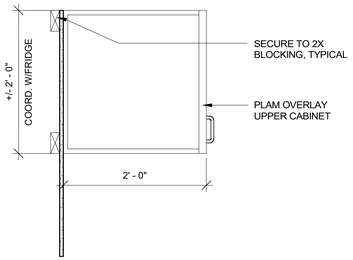

8 / A800 UPPER CABINET SECTION ABOVE REFRIGERATOR
Scale: 1" = 1'-0"

RENOVATIONS TO THE EXETER TOWN HALL

742 TEN ROD RD, EXETER, RI, 02822

BREWSTER THORNTON GROUP ARCHITECTS LLP
317 Iron Horse Way, Suite 202
Providence, RI 02908
401.861.1600
brewsterthornton.com

JOB NO.	DATE
2605	08/31/26

ISSUE : **BID DOCUMENTS**

NO.	REVISION DESCRIPTION	DATE

SHEET TITLE
MILLWORK

SHEET
A800

8/31/2026 12:58:07 PM

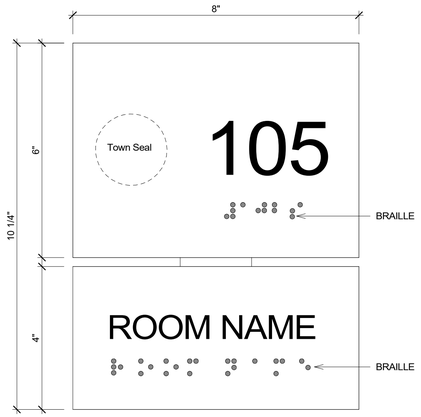

TYPE A

Note: All rooms. Unless noted otherwise..

TYPE B

Note: Provide at all lavatories.

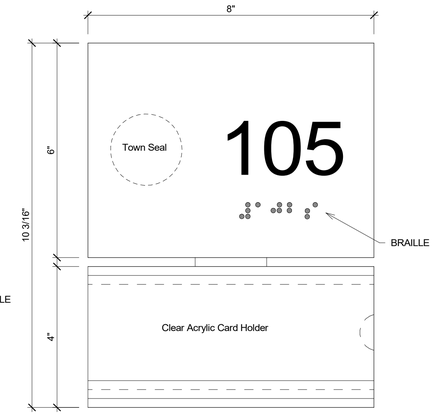

TYPE C

Note: Provide at each office.
Provide backplates where located on glass.

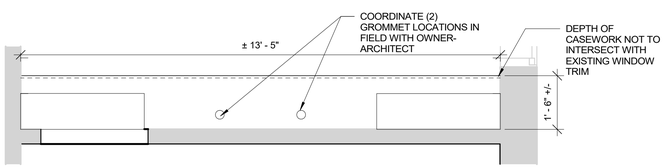

PLAN

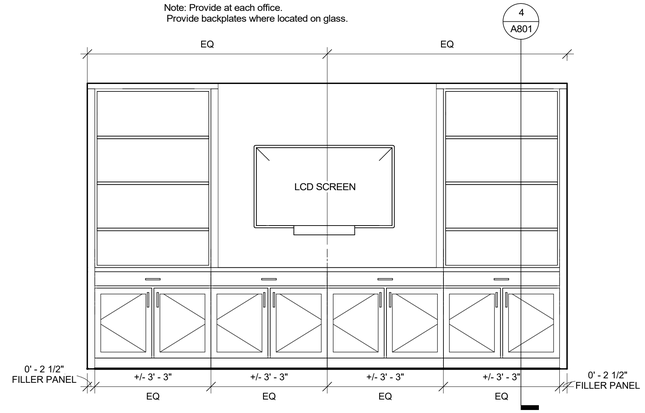

ELEVATION

1 A801 CONFERENCE ROOM MILLWORK - ALTERNATE #4
Scale: 1/2" = 1'-0"

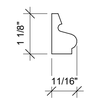

3 A801 WAINSCOTTING TRIM MOULDING
Scale: 6" = 1'-0"

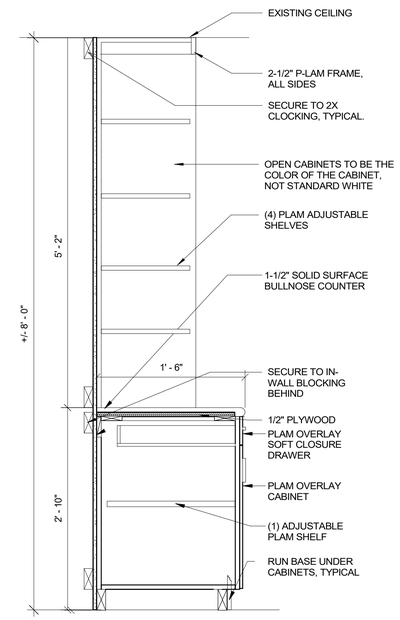

4 A801 CONFERENCE ROOM SECTION
Scale: 1" = 1'-0"

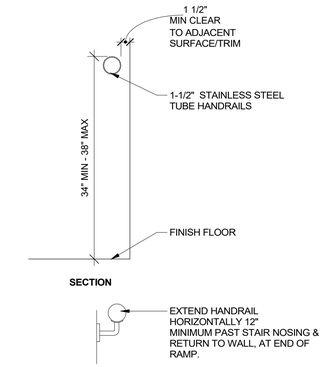

NOTE: PROVIDE BRACKETS BETWEEN 6-12" FROM EACH END. BRACKETS TO BE EVENLY SPACED NO LONGER THAN 48" APART. FASTEN BRACKETS DIRECTLY INTO SOLID WOOD STUDS. ALL FASTENERS TO BE CONCEALED.

6 A801 WAINSCOTTING TRIM PANEL MOULDING
Scale: 1" = 1'-0"

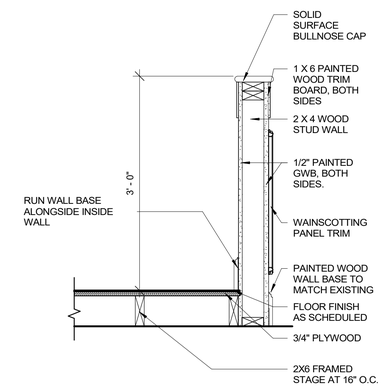

7 A801 SECTION THROUGH STAIR WALL AT STAGE/RAMP
Scale: 1" = 1'-0"

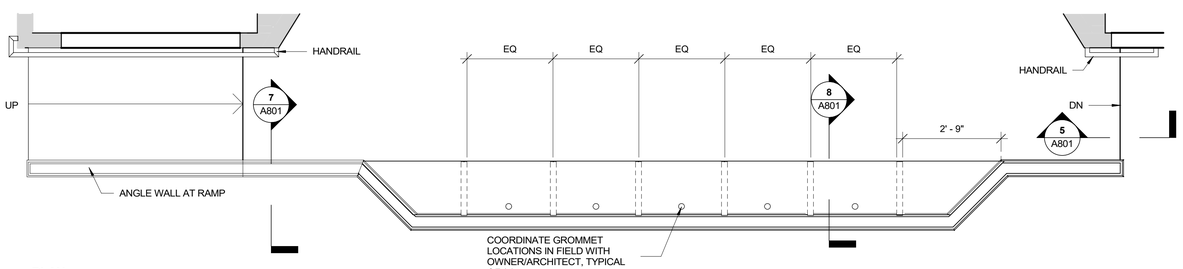

PLAN

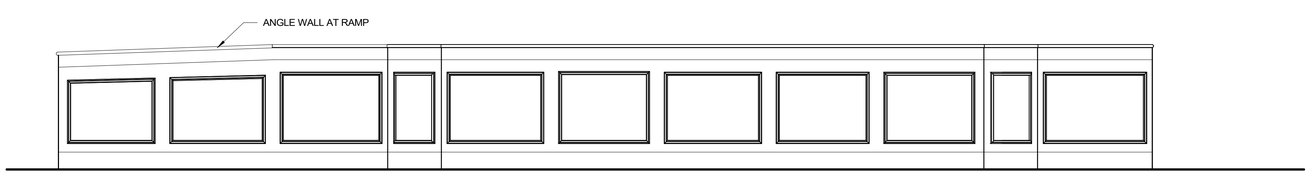

ELEVATION

2 A801 MEETING ROOM DAIS MILLWORK
Scale: 1/2" = 1'-0"

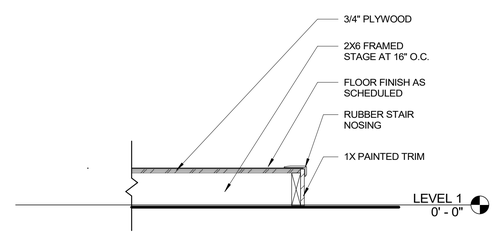

5 A801 SECTION DETAIL @ STAGE STAIR
Scale: 1" = 1'-0"

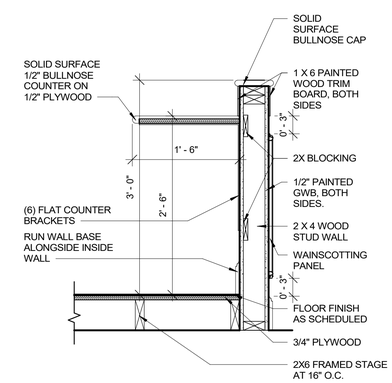

8 A801 SECTION THROUGH DIAS MILLWORK
Scale: 1" = 1'-0"

RENOVATIONS TO THE EXETER TOWN HALL

742 TEN ROD RD, EXETER, RI, 02822

BREWSTER THORNTON GROUP ARCHITECTS LLP
317 Iron Horse Way, Suite 202
Providence, RI 02908
401.861.1600
brewsterthornton.com

JOB NO.	DATE
2605	08/31/26

ISSUE : **BID DOCUMENTS**

NO.	REVISION DESCRIPTION	DATE

SHEET TITLE
MILLWORK & SIGNAGE

SHEET
A801

8/31/2026 12:58:08 PM

GENERAL

- EQUIPMENT TO BE REMOVED
- EXISTING / DEMOLITION — EXTENT OF DEMOLITION. VERIFY SIZE AND LOCATION IN FIELD PRIOR TO INSTALLATION
- NEW / EXISTING — POINT TO CONNECT NEW TO EXISTING. VERIFY SIZE AND LOCATION IN FIELD PRIOR TO INSTALLATION
- S — SWITCH
- S — SENSOR
- T — WALL THERMOSTAT
- H — WALL MOUNTED HUMIDISTAT
- T C — COOLING THERMOSTAT (REVERSE ACTING)
- T H/C — HEATING/COOLING THERMOSTAT
- THERMOSTAT GUARD w/ KEY LOCK BY HONEYWELL MODEL VERSAGAURD
- SP — DUCT MOUNTED STATIC PRESSURE SENSOR
- SD — DUCT MOUNTED SMOKE DETECTOR
- HS — DUCT MOUNTED HUMIDITY SENSOR
- TS — DUCT MOUNTED TEMPERATURE SENSOR
- TC — WALL MOUNTED TIME CLOCK
- CO2 — CO2 SENSOR FOR DEMAND CONTROL VENTILATION

DUCTWORK

- SUPPLY CEILING DIFFUSER THROW PATTERN
- RETURN/EXHAUST CEILING REGISTER
- CEILING EXHAUST FAN WITH FLEXIBLE CONNECTION
- SIDE WALL GRILLE/REGISTER
- LINEAR DIFFUSER
- FLOOR GRILLE/REGISTER
- SUPPLY DUCT UP
- SUPPLY DUCT DOWN
- RETURN/EXHAUST DUCT UP
- RETURN/EXHAUST DUCT DN.
- MITERED ELBOWS 90° w/ VANES
- MITERED ELBOWS 45° w/ VANES
- 30° 2 PIECE CUT ELBOW
- CUT ELBOW 45° 3 PIECE
- CUT ELBOW 60° 3 PIECE
- CUT ELBOW 90° 3 PIECE
- CUT ELBOW 90° 5 PIECE
- ROUND ELBOWS 90° LONG RADIUS (R/D=1.5)
- ROUND ELBOWS 90° SHORT RADIUS (R/D=1.25)
- ROUND ELBOWS 45° LONG RADIUS
- ROUND ELBOWS 45° SHORT RADIUS
- ROUND DUCT DROP
- ROUND DUCT RISER
- TAKE-OFF W/ BRANCH DAMPER (REFER TO DETAIL FOR TAKE-OFF TYPE)
- BULLHEAD SPLIT SUPPLY (OR)
- BULLHEAD CONVERGE RETURN/EXHAUST
- HORIZONTAL OFFSET
- FLEXIBLE CONNECTION (6" NEOPRENE)
- LINED DUCT - SIZE INDICATES INSIDE DIMENSION (24x12)
- 24x12 — RECTANGULAR DUCT - FIRST FIGURE IS SIDE SHOWN (24x12)
- SPIRAL DUCTWORK (26Ø)
- FLEXIBLE DUCTWORK
- DUCT HUMIDIFIER
- DUCT FILTER BOX
- VOLUME DAMPER (OPPOSED BLADE TYPE)
- MD — MOTORIZED CONTROL DAMPER (MD)
- BOD — BACK DRAFT DAMPER (BO)
- FD — DYNAMIC FIRE DAMPER HORIZONTAL (FD)
- FD — DYNAMIC FIRE DAMPER VERTICAL (FD)
- OA — OUTSIDE AIR MEASUREMENT STATION (OA)
- DUCT CAP
- WELDED DUCT
- EXISTING DUCT TO REMAIN (SHOWN LIGHT)
- EXISTING DUCT TO BE REMOVED (SHOWN DARK)
- ACCESS PANEL ON BOTTOM OF DUCT
- ACCESS PANEL ON SIDE OF DUCT
- TRANSITION - ECCENTRIC
- TRANSITION - CONCENTRIC
- RECTANGULAR TO ROUND TRANSITION
- EXHAUST/RETURN/INTAKE FLOW ARROW
- SUPPLY AIR FLOW DIRECTION

PIPING

- HWS — HEATING HOT WATER SUPPLY
- HWR — HEATING HOT WATER RETURN
- CHWS — CHILLED WATER SUPPLY
- CHWR — CHILLED WATER RETURN
- DTS — DUAL TEMP SUPPLY (HEATING/CHILLED WATER)
- DTR — DUAL TEMP RETURN (HEATING/CHILLED WATER)
- HPS — HIGH PRESSURE STEAM (100psi)
- LPS — LOW PRESSURE STEAM (15psi)
- SCR — STEAM CONDENSATE RETURN (GRAVITY)
- PCR — PUMPED CONDENSATE STEAM RETURN
- L — LIQUID REFRIGERANT LINES
- S — SUCTION REFRIGERANT LINES
- CD — CONDENSATE DRAIN
- CTWS — COOLING TOWER WATER SUPPLY
- CTWR — COOLING TOWER WATER RETURN
- PIPE TURNING DOWN
- PIPE TURNING UP
- TEE OFF TOP
- TEE OFF BOTTOM
- DROP AND RUN
- DROP AND TURN
- TEE UP
- TEE DOWN
- VALVE IN RISER
- PIPE CAP
- CLEAN-OUT
- UNION (DELECTRIC TYPE ON DISSIMILAR METALS)
- FLANGED (DELECTRIC TYPE ON DISSIMILAR METALS)
- BALL VALVE
- GATE VALVE
- GATE VALVE
- BUTTERFLY VALVE
- GLOBE VALVE
- DIAPHRAGM VALVE
- OS-Y GATE VALVE
- 3-WAY VALVE
- 4-WAY VALVE
- CHECK VALVE (SWING TYPE)
- CHECK VALVE w/ BALL DRIP
- PRESSURE REDUCING VALVE
- PLUG VALVE
- CIRCUIT SETTER w/ GAGE PORT
- MULTI PURPOSE VALVE
- AUTOMATIC BALANCING VALVE
- PUMP
- STRAINER w/ BLOW DOWN (INLINE)
- PIPE DRAIN w/ BALL VALVE & CAP
- EPDM FLEXIBLE CONNECTION
- EPDM FLEXIBLE CONNECTION
- UP/DN — PITCH UP/DN. IN DIRECTION OF FLOW
- F&T STEAM TRAP
- ANCHOR
- PIPE GUIDE
- WALL SLEEVE
- FS — FLOW SWITCH
- FM — FLOW RATE METER (IN GPM)
- FS — FLOW SENSOR
- TS — TEMPERATURE SENSOR
- SAFETY RELIEF VALVE PIPE TO FLOOR DRAIN
- MANUAL NON-RISING
- MANUAL LEVER
- QUICK OPEN LEVER
- M — PNEUMATIC ACTUATOR
- M — ELECTRIC ACTUATOR
- S — ELECTRIC ACTUATOR
- THERMOMETER w/ STOP
- PRESSURE GAGE w/ STOP
- AUTO. AIR VENT

ABBREVIATIONS

ALL ABBREVIATIONS SHOWN ARE NOT NECESSARILY USED ON THIS PROJECT

AFF	ABOVE FINISHED FLOOR
AC	AIR CONDITIONING UNIT
AD	ACCESS DOOR
AFF	ABOVE FINISHED FLOOR
AF	AIR FILTER
AHU	AIR HANDLING UNIT
AP	ACCESS PANEL
ARCH	ARCHITECT
ATC	AUTOMATIC TEMPERATURE CONTROL
AS	AIR SEPARATOR
AV	AIR VENT
BB	BASEBOARD
BD	BAROMETRIC DAMPER (COUNTER BALANCED)
BDD	BACKDRAFT DAMPER
BHP	BRAKE HORSEPOWER
BLDG	BUILDING
BOD	BOTTOM OF DUCT
BTU	BRITISH THERMAL UNITS
BTUH	BTU PER HOUR
BV	BALL VALVE
B	BOILER
CB	CHILLER BOILER
CC	COOLING COIL
CEF	CEILING EXHAUST FAN
CFM	CUBIT FEET PER MINUTE
CH	CEILING HEATER
CH	CHILLER
CP	CONDENSATE PUMP
CP	CONTROL PANEL
CO	CLEAN OUT
CO2	CARBON DIOXIDE
COP	CENTER OF PIPE
CR	CONDENSATE RECEIVER
CRP	CONDENSATE RETURN PUMP
CT	COOLING TOWER
CUH	CABINET UNIT HEATER
CTWP	COOLING TOWER WATER PUMP
CWP	CHILLED WATER PUMP
CV	CONVECTOR
CU	CONDENSING UNIT
DDC	DIRECT DIGITAL CONTROL
DB	DRY BULB
DIA	DIAMETER
DIFF	DIFFUSER
DN	DOWN
DX	DIRECT EXPANSION
DP	DEW POINT
DWG	DRAWING
DHE	DOMESTIC WATER HEATER EXCHANGER
E	EXISTING
EAT	ENTERING AIR TEMPERATURE
EBB	ELECTRIC BASEBOARD
EFF	EFFICIENCY
EF	EXHAUST FAN
EH	ELECTRIC HUMIDIFIER
ELEC	ELECTRICAL
ELV	ELEVATION
ERV	ENERGY RECOVERY UNIT
ESP	EXTERNAL STATIC PRESSURE
ET	EXPANSION TANK
EUH	ELECTRIC UNIT HEATER
EWT	ENTERING WATER TEMPERATURE
EXH	EXHAUST
EXP	EXPANSION
°F	DEGREES FAHRENHEIT
FA	FRESH AIR
FA	FREE AREA
FBT	FLAT BOTTOM TRANSIENT
FCU	FAN COIL UNIT
FD	FIRE DAMPER
FLA	FULL LOAD AMPS
FLEX	FLEXIBLE
FMS	FLOW MEASURING STATION
FPI	FINS PER INCH
FPM	FEET PER MINUTE
FOS	FUIL OIL SUPPLY
FOR	FUIL OIL RETURN
FTR	FINNED TUBE RADIATION
FTT	FLAT TOP TRANSITION
FT	FEET
GAL	GALLONS
GALV	GALVANIZED
GC	GENERAL CONTRACTOR
GPM	GALLONS PER MINUTE
GV	GATE VALVE
HC	HEATING COIL
HP	HORSEPOWER
HP	HEAT PUMP
HVAC	HEATING, VENTILATION, AND AIR CONDITIONING
HV	HEATING & VENTILATING UNIT
HHE	HEATING WATER HEAT EXCHANGER
HE	HEAT EXCHANGER
HWP	HOT WATER PUMP
HW	HOT WATER
HWR	HOT WATER RETURN
HWS	HOT WATER SUPPLY
HZ	HERTZ
IN	INCHES
IRV	INTAKE ROOF VENT
KEF	KITCHEN EXHAUST FAN
KW	KILOWATT
LAT	LEAVING AIR TEMPERATURE
LD	LINEAR DIFFUSER
LF	LINEAR DIFFUSER
LF	LINEAR FEET
LPH	LOUVERED PENTHOUSE
LPS	LOW PRESSURE STEAM
LRA	LOCKED ROTOR AMPS
LWT	LEAVING WATER TEMPERATURE
MAU	MAKE-UP AIR UNIT
MBH	THOUSANDS OF BTU'S PER HOUR
MCA	MINIMUM CIRCUIT AMPS
MD	MOTORIZED DAMPER
MECH	MECHANICAL
MOCP	MAXIMUM OVER CORRENT PROTECTION
MTD	MOUNTED
N/A	NOT APPLICABLE
NC	NORMALLY CLOSED
NEZV	NONE ELECTRIC ZONE VALVE
NIC	NOT IN CONTRACT
NO	NORMALLY OPEN
NTS	NOT TO SCALE
OA	OUTSIDE AIR
OAT	OUTSIDE AIR TEMPERATURE
OBD	OPPOSED BLADE DAMPER
OD	OUTSIDE DIAMETER
P	PUMP
PD	PRESSURE DROP
PSI	POUNDS PER SQUARE INCH GA.
PR	PANEL RADIATOR
PRV	PRESSURE REDUCING VALVE
PTAC	PACKAGED TERMINAL AIR CONDITIONER
R	RETURN
RA	RETURN AIR
REF	ROOF EXHAUST FAN
REQ'D	REQUIRED
RG	RETURN GRILLE
RH	RELATIVE HUMIDITY
RH	REHEAT COIL
RLA	RATED LOAD AMPS
RM	ROOM
RPM	REVOLUTIONS PER MINUTE
RTU	ROOF TOP UNIT
RVD	REMOTE CONTROLLED VOLUME DAMPER
S	SUPPLY
SA	SUPPLY AIR
SA	SOUND ATTENUATOR
SAT	SUPPLY AIR TEMPERATURE
SCT	SATURATED CONDENSING TEMPERATURE
SD	SMOKE DAMPER
SF	SQUARE FEET
SH	STEAM HUMIDIFIER
SFD	SMOKE/FIRE DAMPER
SP	STATIC PRESSURE
SQ	SQUARE
SST	SATURATED SUCTION TEMPERATURE
STL	STEEL
T	THERMOSTAT
T.B.D.	TO BE DEMOLISHED
TU	TERMINAL UNIT
TYP.	TYPICAL
UC	UNDERCUT DOOR 3/4" (MIN.)
UH	UNIT HEATER
UV	UNIT VENTILATOR
VAV	VARIABLE AIR VOLUME
VD	VOLUME DAMPER
VFD	VARIABLE FREQUENCY DRIVE
VIF	VERIFY IN FIELD
W/	WITH
W/O	WITHOUT
WB	WET BULB TEMPERATURE
WG	WATER GAUGE
WMS	WIRE MESH SCREEN
ZV	ZONE VALVE
WH	WATER HEATER

PROJECT GENERAL NOTES

1. SCOPE OF WORK SHALL INCLUDE ALL LABOR, MATERIALS, TOOLS, EQUIPMENT, TRANSPORTATION, HOISTING, RIGGING, INSURANCE, ETC., TO PERFORM THE WORK AS INDICATED ON THE DRAWINGS AND HEREIN SPECIFIED FOR A COMPLETE INSTALLATION. ALL WORK SHALL BE IN ACCORDANCE WITH NATIONAL, STATE AND LOCAL CODES AND ORDINANCES HAVING JURISDICTION, AS INTERPRETED BY THE ARCHITECT/ENGINEER.
2. MECHANICAL EQUIPMENT AND SUCH OTHER APPARATUS AS MAY REQUIRE MAINTENANCE AND OPERATION FROM TIME TO TIME SHALL BE MADE EASILY ACCESSIBLE. ALTHOUGH THE EQUIPMENT MAY BE SHOWN ON THE DRAWINGS IN CERTAIN LOCATIONS, THE CONSTRUCTION MAY DISCLOSE THAT SUCH LOCATIONS DO NOT MAKE ITS POSITION READILY ACCESSIBLE. IN SUCH CASES, THE OWNER OR HIS REPRESENTATIVE SHALL BE NOTIFIED BEFORE ADVANCING THE CONSTRUCTION TO A STAGE WHERE A CHANGE WILL REFLECT ADDITIONAL EXPENSE.
3. THE DRAWINGS SHOW THE LAYOUT OF THE MECHANICAL SYSTEMS AND INDICATE THE APPROXIMATE LOCATIONS OF DUCTWORK, PIPING, BRANCHES AND ELBOWS, AND EQUIPMENT. THE RUNS AND QUANTITY OF DUCTWORK, PIPING, OFFSETS AND ELBOWS AS SHOWN ON THE DRAWINGS ARE DIAGRAMMATIC ONLY. THE EXACT ROUTING OF QUANTITY DUCTWORK, PIPING, OFFSETS AND ELBOWS SHALL BE DETERMINED BY THE STRUCTURAL CONDITIONS, POSSIBLE OBSTRUCTIONS AND COORDINATION DRAWINGS. THIS SHALL NOT BE CONSTRUED TO MEAN THAT THE DESIGN OF THE SYSTEMS MAY BE CHANGED, BUT REFERS ONLY TO EXACT RUNS BETWEEN GIVEN POINTS.
4. IT SHALL BE THE RESPONSIBILITY OF THE HVAC CONTRACTOR TO STUDY ALL DRAWINGS AND DETAILS SO THAT THE INSTALLATION OF ALL NEW WORK CAN BE FULLY COORDINATED. COORDINATE WITH ALL TRADES TO AVOID INTERFERENCE OF EQUIPMENT.
5. HVAC WORK IS INDICATED DIAGRAMMATICALLY. EXACT LOCATION OF ALL COMPONENTS ARE TO BE DETERMINED IN THE FIELD AND BY THE ACTUAL BUILDING CONDITIONS. EQUIPMENT, DUCTS OR PIPES INTERFERING WITH OTHER INSTALLATIONS SHALL BE RELOCATED AS REQUIRED. ANY DEVIATIONS FROM THE DRAWINGS SHALL BE BROUGHT TO THE ARCHITECT'S AND ENGINEERS ATTENTION BEFORE COMMENCING WORK.
6. HVAC CONTRACTOR SHALL COORDINATE ALL WALL, CEILING, FLOOR, ROOF AND BEAM PENETRATIONS WITH ARCHITECT AND STRUCTURAL ENGINEER PRIOR TO COMMENCING WORK.
7. PRODUCTS REQUIRED BY CONSTRUCTION BUT NOT SPECIFICALLY DESCRIBED HEREIN SHALL BE AS SELECTED BY THE CONTRACTOR SUBJECT TO THE APPROVAL OF THE ARCHITECT AND ENGINEER.
8. PROVIDE ALL MATERIALS, LABOR, AND ACCESSORIES FOR A COMPLETE AND OPERABLE SYSTEMS AND AS REQUIRED BY THE EQUIPMENT MANUFACTURER'S INSTALLATION INSTRUCTIONS.
9. INSTALL ALL MATERIALS, ACCESSORIES AND EQUIPMENT ACCORDING TO MANUFACTURER'S INSTALLATION INSTRUCTIONS FOR A COMPLETE AND OPERABLE SYSTEMS AS INDICATED ON THE DRAWINGS MANUFACTURERS INSTRUCTIONS.
10. INSTALLATION OF THE HVAC SYSTEM SHALL PERMIT ACCESSIBILITY FOR SERVICE AND/OR REPLACEMENT OF EQUIPMENT. WHERE ACCESS PANELS ARE REQUIRED, CONSULT w/ ARCHITECT PRIOR TO PROCUREMENT AND INSTALLATION. REFER TO ARCHITECTURAL ACCESS PANEL NOTES FOR FURTHER INFORMATION.
11. ALL MISCELLANEOUS STRUCTURAL SUPPORTS REQUIRED FOR HVAC EQUIPMENT INSTALLATION SHALL BE PROVIDED BY MECHANICAL CONTRACTOR.
12. INSTALL ALL PIPING BELOW DUCTWORK UNLESS CLEARANCE CONDITION REQUIRES PIPING TO BE ABOVE.
13. WHERE DUCTWORK PENETRATES ANY SMOKE AND/OR FIRE RATED PARTITIONS PROVIDE UL LISTED DYNAMIC FIRE AND/OR SMOKE DAMPERS PER NFPA GUIDELINES. INSTALL DAMPER PER MANUFACTURE INSTRUCTIONS.
14. ALL CEILING MOUNTED EQUIPMENT SHALL BE INSTALLED IN SUCH A WAY THAT LIGHTS, PIPING, AND DUCTWORK DO NOT BLOCK ACCESS TO UNITS AND RELATED ACCESSORIES.
15. EXACT ELEVATION FOR SIDE WALL DIFFUSERS, REGISTERS AND GRILLES SHALL BE APPROVED BY THE ARCHITECT BEFORE INSTALLATION.
16. INSTALL ROOM THERMOSTATS OR SENSORS 48" (MAXIMUM) ABOVE FINISHED FLOOR OR AS OTHERWISE DIRECTED BY THE ARCHITECT.
17. THE MECHANICAL CONTRACTOR SHALL INCLUDE IN THEIR BID AND SECURE THE SERVICES OF THE PROJECT ELECTRICAL CONTRACTOR FOR INCIDENTAL LINE VOLTAGE REQUIRED FOR AUTOMATIC TEMPERATURE CONTROLS.
18. THE MECHANICAL CONTRACTOR MUST COORDINATE THE COMPONENTS AND PROGRAMMING OF THEIR EQUIPMENT VENDORS AND THEIR ATC SUBCONTRACTOR. CONTROL SEQUENCES SHALL BE TESTED AND CORRECTED TO THE SATISFACTION OF THE OWNER AND ENGINEER.
19. THE MECHANICAL CONTRACTOR MUST INCLUDE COMPLETE TESTING, ADJUSTING, AND BALANCING OF EVERY COMPONENT. ENTERING WATER TEMPERATURE, LEAVING WATER TEMPERATURE, GPM, AND PRESSURE DROP READINGS ARE REQUIRED AT EVERY COIL AND COMPONENT; ABSOLUTELY NO AUTOMATIC BALANCING VALVES WILL BE ALLOWED. EVERY AIR SYSTEM MUST BE TESTED, ADJUSTED, AND BALANCED. ENTERING AIR TEMPERATURE, LEAVING AIR TEMPERATURE, AND APD THROUGH EACH COIL IS REQUIRED WITH CORRESPONDING WATER-SIDE INFORMATION. CFM FLOW WILL BE MEASURED AND CHECKED AGAINST AIRFLOW STATION READING TO CALIBRATE AIR FLOW STATIONS. CFM AIRFLOW AND PRESSURE MUST BE MEASURED IN MAIN AND BRANCH DUCTS, DIFFUSER, AND REGISTER AIRFLOW SHALL BE MEASURED AT EACH DEVICE AND ADJUSTMENTS MADE. INITIAL, ADJUSTED, AND FINAL READINGS SHALL BE RECORDED. CONDITIONS AT TIME OF TESTING MUST INCLUDE OUTDOOR AIR TEMPERATURE, MODE OF SYSTEM, CONDITION OF FILTERS, CONDITION OF EQUIPMENT, AND ANY OTHER RELEVANT INFORMATION. DOCUMENT ALL PROBLEMS FOUND OR CONDITIONS WHICH IMPACT RESULTS OF BALANCING. RECORD ALL MOTOR POWER DATA AND FAN RPMS. MARK ALL BALANCED SETTINGS IN PERMANENT INK ON THE VALVE, VOLUME DAMPER, OR SPEED.

DRAWING LIST

SHEET NUMBER	SHEET NAME
M000	MECHANICAL LEGEND & SYMBOLS
MD100	MECHANICAL DEMOLITION PLAN
M100	MECHANICAL FLOOR PLAN
M300	MECHANICAL DETAILS
M301	MECHANICAL DETAILS

RENOVATIONS TO THE EXETER TOWN HALL

742 TEN ROD RD, EXETER, RI, 02822

BREWSTER THORNTON GROUP ARCHITECTS LLP
317 Iron Horse Way, Suite 202
Providence, RI 02908
401.861.1600
brewsterthornton.com

ZAINO & ASSOCIATES
Zaino & Associates
183 PROVIDENCE-NEW LONDON TURNPIKE
NORTH STONINGTON, CT 06359

JOB NO.	DATE
2605	08/31/2026

ISSUE : **BID DOCUMENTS**

NO.	REVISION DESCRIPTION	DATE

SHEET TITLE

MECHANICAL LEGEND & SYMBOLS

SHEET

M000

GENERAL SHEET NOTES

1. EXACT LOCATION OF EXISTING TO REMAIN DUCTWORK, GRILLES, DIFFUSERS, AND EQUIPMENT SHALL BE COORDINATED BY CONTRACTOR DURING DEMO WORK. CONTRACTOR SHALL VERIFY ALL EXISTING CONDITIONS AND REPORT AN DISCREPANCIES TO THE ENGINEER.
2. A PRE-CONSTRUCTION AIR BALANCING TEST SHALL BE PERFORMED PRIOR TO ANY DEMOLITION WORK. THE CONTRACTOR SHALL SUBMIT THE REPORT TO THE ENGINEER AND SHALL PROVIDE THE AIRFLOW CFMs OF ALL EXISTING REGISTERS, GRILLES, AND DIFFUSERS.

KEYED SHEET NOTES

ETR — EXISTING TO REMAIN

01 — RELOCATE EXISTING SUPPLY, RETURN, AND EXHAUST REGISTERS, GRILLES, DIFFUSERS, AND ASSOCIATED FLEX AND BRANCH DUCTWORK, HANGERS, SUPPORTS, AND ASSOCIATED APPURTENANCES IN THEIR ENTIRETY TO THE NEW LOCATION AS SHOWN ON NEW WORK PLAN M100. EXTEND OR REPLACE FLEX DUCTWORK AND DUCT INSULATION AS NEEDED. REPLACE OR PROVIDE NEW BALANCING DAMPERS.

02 — RELOCATE EXISTING THERMOSTATS AND SENSORS TO NEW LOCATION SHOWN ON NEW WORK PLAN M100. FINAL LOCATION OF THERMOSTAT SHALL BE COORDINATED WITH OWNER DURING CONSTRUCTION.

03 — THE BOILER, AND ASSOCIATED PUMPS, PIPING, VALVES, CONTROLS, HANGERS, SUPPORTS, AND ASSOCIATED APPURTENANCES IN THEIR ENTIRETY SHALL REMAIN.

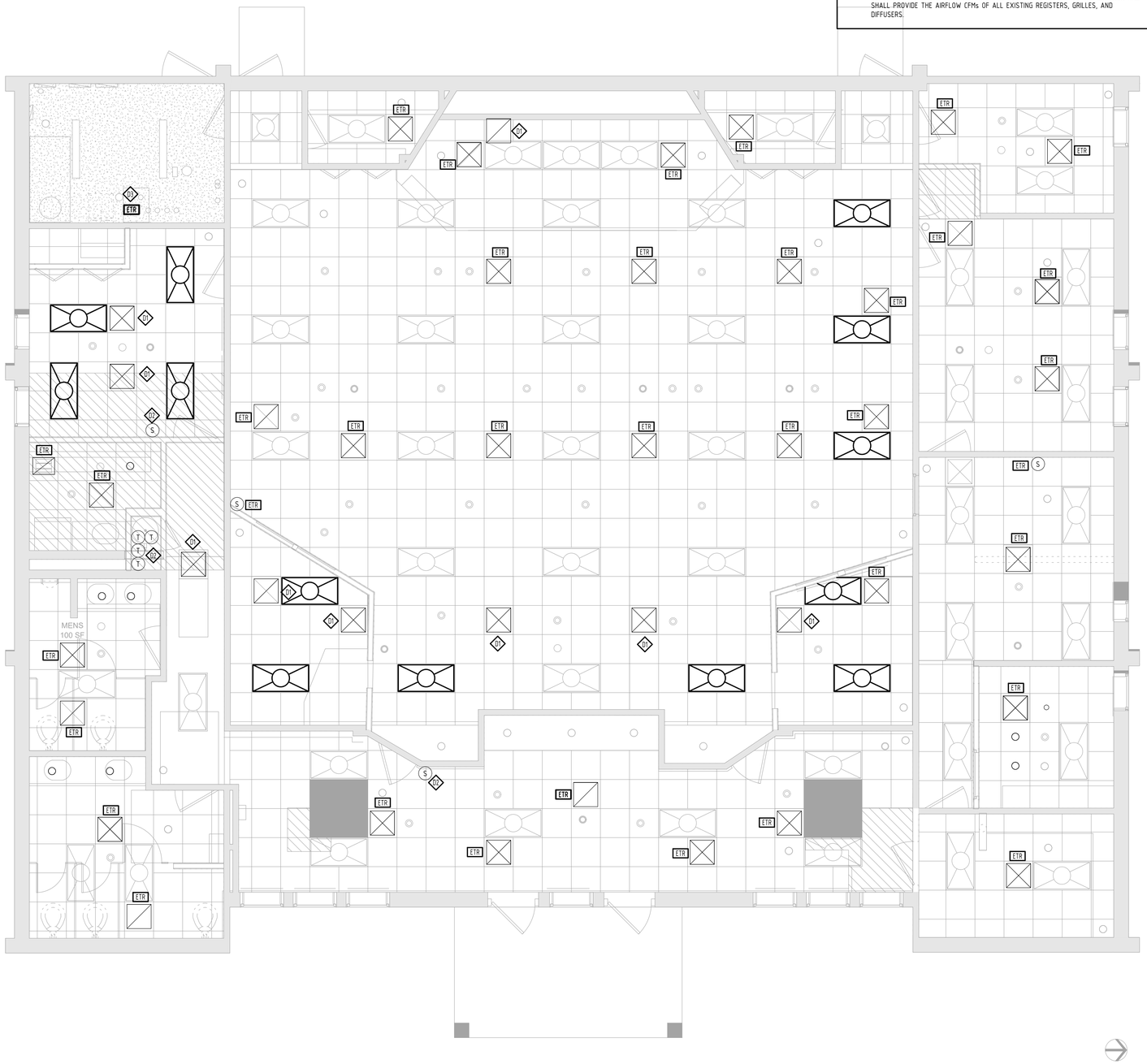

1 MECHANICAL - DEMOLITION PLAN
SCALE: 1/4" = 1'-0"
0 4'-0" 8'-0" 12'-0"

RENOVATIONS TO THE EXETER TOWN HALL

742 TEN ROD RD, EXETER, RI, 02822

BREWSTER THORNTON GROUP ARCHITECTS LLP
317 Iron Horse Way,
Suite 202
Providence, RI 02908

401.861.1600
brewsterthornton.com

ZAINO & ASSOCIATES
Zaino & Associates
183 PROVIDENCE-NEW LONDON TURNPIKE
NORTH STONINGTON, CT 06359

JOB NO.	DATE
2605	08/31/2026

ISSUE : BID DOCUMENTS

NO.	REVISION DESCRIPTION	DATE

SHEET TITLE
MECHANICAL DEMOLITION PLAN

SHEET
MD100

GENERAL SHEET NOTES

1. EXACT LOCATION OF EXISTING TO REMAIN DUCTWORK, GRILLES, DIFFUSERS AND EQUIPMENT SHALL BE COORDINATED BY CONTRACTOR DURING DEMO WORK. CONTRACTOR SHALL VERIFY ALL EXISTING CONDITIONS AND REPORT AN DISCREPANCIES TO THE ENGINEER.
2. ALL EQUIPMENT OR DAMPERS LOCATED ABOVE A SOLID GYP CEILING WILL NEED AN ACCESS PANEL. COORDINATE ACCESS PANEL SIZE WITH MANUFACTURE'S INSTRUCTIONS AND ARCHITECT (MINIMUM 24"x24"). COORDINATE CEILING TYPE, FINISH, AND RATING WITH GC.

GENERAL SHEET NOTES

3. COORDINATE THE FINAL DUCTWORK, DIFFUSER, GRILLE, AND REGISTER LOCATIONS WITH THE EXISTING STRUCTURE AND NEW LIGHTING OR LIGHTING SUPPORTS/HANGERS PRIOR TO INSTALLING DUCTWORK, DIFFUSERS, GRILLES, AND REGISTERS.
4. ALL EXISTING EQUIPMENT, PIPING, DUCTWORK, REGISTERS, GRILLES, AND DIFFUSERS EXPOSED DURING CONSTRUCTION SHALL BE CLEANED.
5. PROVIDE NEW INSULATION AS NEEDED FOR ALL EXISTING DUCTWORK AND PIPING.

KEYED SHEET NOTES

ETR — EXISTING TO REMAIN EQUIPMENT

1 — RELOCATE EXISTING SUPPLY, RETURN, AND EXHAUST REGISTERS, GRILLES, DIFFUSERS, AND ASSOCIATED FLEX AND BRANCH DUCTWORK, DAMPERS, HANGERS, SUPPORTS, AND ASSOCIATED APPURTENANCES IN THEIR ENTIRETY TO THE NEW LOCATION AS SHOWN ON THIS PLAN. RE-BALANCE EXISTING EQUIPMENT AND CLEAN ASSOCIATED DUCTWORK, REGISTERS, GRILLES, AND DIFFUSERS EXPOSED DURING CONSTRUCTION.

2 — RELOCATE EXISTING THERMOSTATS AND SENSORS TO NEW LOCATION AS SHOWN ON THIS PLAN. FINAL LOCATION OF THERMOSTAT SHALL BE COORDINATED WITH OWNER DURING CONSTRUCTION.

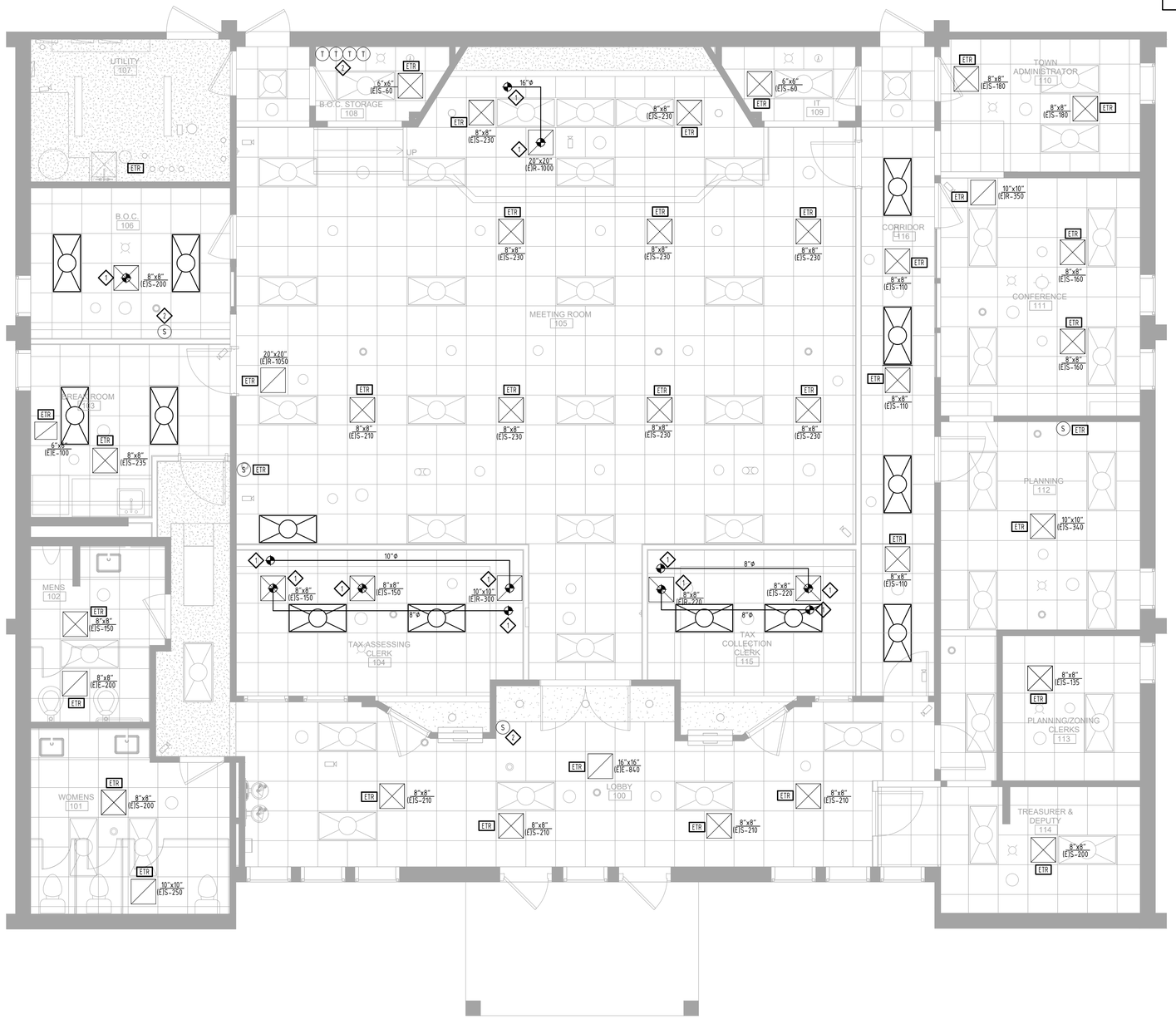

1 MECHANICAL - FLOOR PLAN
SCALE: 1/4" = 1'-0"
0 4'-0" 8'-0" 12'-0"

RENOVATIONS TO THE EXETER TOWN HALL

742 TEN ROD RD, EXETER, RI, 02822

BREWSTER THORNTON GROUP ARCHITECTS LLP
317 Iron Horse Way,
Suite 202
Providence, RI 02908

401.861.1600
brewsterthornton.com

ZAINO & ASSOCIATES
Zaino & Associates
183 PROVIDENCE-NEW LONDON TURNPIKE
NORTH STONINGTON, CT 06359

JOB NO.	DATE
2605	08/31/2026

ISSUE : BID DOCUMENTS

NO.	REVISION DESCRIPTION	DATE

SHEET TITLE
MECHANICAL FLOOR PLAN

SHEET
M100

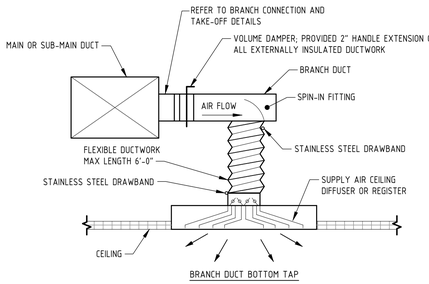

1 DIFFUSER/REGISTER CONNECTION DETAIL

NOT TO SCALE

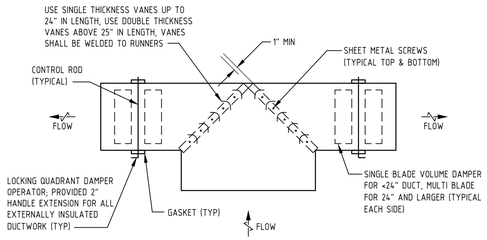

5 TYPICAL MAIN BRANCH CONNECTION DETAIL

NOT TO SCALE

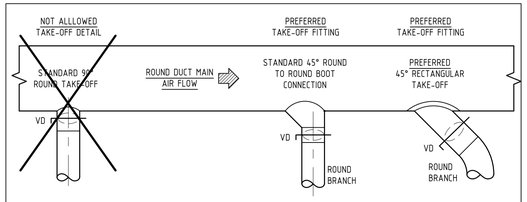

ROUND MAIN BRANCH		
BRANCH DUCT SIZE	HOLE SIZE	MINIMUM DUCT MAIN HEIGHT
5"	8"	9"
6"	9"	10"
7"	10"	11"
8"	11"	12"
9"	12"	13"
10"	13"	14"
12"	15"	16"
14"	17"	18"
16"	19"	20"

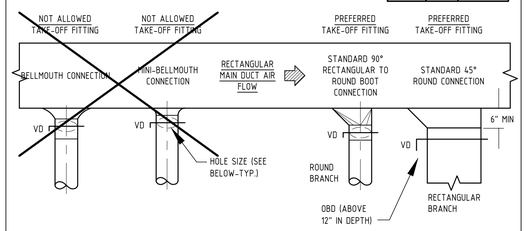

RECTANGULAR MAIN BRANCH		
BRANCH DUCT SIZE	HOLE SIZE	MINIMUM DUCT MAIN HEIGHT
6 x 4	1.5 x 5.5	7.5
10 x 4	11.5 x 5.5	7.5
16 x 4	17.5 x 5.5	7.5
24 x 4	25.5 x 5.5	7.5
6 x 5	7.5 x 6.5	8.5
10 x 5	11.5 x 6.5	8.5
16 x 5	17.5 6.5	8.5
24 x 5	25.5 x 6.5	8.5
6 x 6	7.5 x 7.5	9.5
10 x 6	11.5 x 7.5	9.5
16 x 6	17.5 x 7.5	9.5
24 x 6	25.5 x 7.5	9.5
8 x 8	9.5 x 9.5	11.5
16 x 8	17.5 x 9.5	11.5
24 x 8	25.5 9.5	11.5
10 x 10	11.5 x 11.5	13.5
16 x 10	17.5 x 11.5	13.5
24 x 10	25.5 x 11.5	13.5

NOTES:

1. ALL ROUND AND RECTANGULAR TAKEOFF FITTINGS SHALL BE INCLUDED WITH THE FOLLOWING STANDARD FEATURES:
   A. NEOPRENE GACKET TO MINIMIZE AIR LEAKAGE.
   B. PRE-DRILLED HOLES FOR QUICK MOUNTING.
   C. CONSTRUCTED OF HEAVY DUTY GALVANIZED STEEL.
   D. 26 GAUGE GALV. QUADRANT VOLUME DAMPER W/TIGHT FITTING GASKETING TO MINIMIZE LEAKAGE AT DAMPER PIVOT POINTS
   E. HEAVY DUTY HARDWARE IS AVAILABLE FOR APPLICATIONS WITH INCREASED STATIC PRESSURE.
2. ALTERNATE FITTINGS SHALL BE USED WHEN DUCT HEIGHT DOES NOT PERMIT THE USE OF THE PREFERRED FULL IZE TAKE OFF SUBMIT FITTINGS FOR REVIEW BY ENGINEER PRIOR TO INSTALLATION.
3. THIS DETAIL APPLIES TO SINGLE TAKEOFFS TO DIFFUSERS AS WELL AS BRANCH TAKEOFFS. IT ALSO APPLIES IF TAKEOFFS IN THE HORIZONTAL AS WELL AS THE VERTICAL DIRECTION.
4. SEE PLAN FOR DUCT SIZES.

2 DUCTWORK TAKEOFF DETAIL

NOT TO SCALE

DIMENSION OF LONGEST SIDE- INCHES	SHEET METAL GAGE (ALL FOUR SIDES)	MINIMUM REINFORCING ANGLE SIZE & MAXIMUM LONGITUDINAL SPACING BETWEEN TRANSVERSE JOINTS &/OR INTERMEDIATE REINFORCING	MIN "H" DIM. IN.	DRIVE SLIP / PLAIN "S" SLIP	HEMMED "S" SLIP	ALTERNATE BAR SLIP	REINFORCED BAR SLIP	BAR SLIP / ANGLE SLIP	STAND. SEAM / ANGLE REINFORCED STAND. SEAM	POCKET LOCK / ANGLE REINFORCED POCKET LOCK
				RECOMMENDED GAGE	RECOMMENDED GAGE	RECOMMENDED GAGE	RECOMMENDED GAGE	RECOM- MENDED GAGE / REINFORCED ANGLE SIZE	REINFORCED ANGLE SIZE	RECOM- MENDED GAGE / REINFORCED ANGLE SIZE
UP THRU 12	26	NON REQUIRED	1	26	26	24	24	24 / NOT REQUIRED	NOT REQUIRED	24 / 13 - 18
13 - 18	24	NON REQUIRED	1	24	24	24	24	24 / NOT REQUIRED	NOT REQUIRED	24 / 13 - 18
19 - 30	24	1 x 1 x 1/8 @ 60 "	1	-	24	24	24	24 / NOT REQUIRED	NOT REQUIRED	24 / 19 - 30
31 - 42	22	1 x 1 x 1/8 @ 60 "	1	-	-	22	22	22 / NOT REQUIRED	NOT REQUIRED	22 / 31 - 42
43 - 54	22	1½ x 1½ x 1/8 @ 60"	1½	-	-	22	22	22 / 1½ x 1½ x 1/8	NOT REQUIRED	22 / 43 - 54
55 - 60	20	1½ x 1½ x 1/8 @ 60"	1½	-	-	-	22	22 / 1½ x 1½ x 1/8	NOT REQUIRED	22 / 55 -60
61 - 84	20	1½ x 1½ x 1/8 @ 30"	1½	-	-	-	22	22 / 1½ x 1½ x 1/8	1½ x 1½ x 1/8	22 / 1½ x 1½ x 1/8

TRANSVERSE REINFORCING SIZE IS DETERMINED BY DIMENSION OF SIDE TO WHICH ANGLE IS APPLIED

3 DUCT CONSTRUCTION DETAIL

NOT TO SCALE

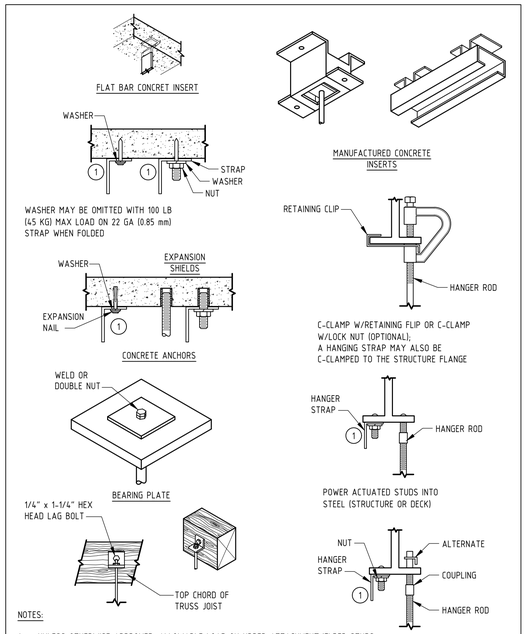

NOTES:

1. UNLESS OTHERWISE APPROVED, ALLOWABLE LOAD ON UPPER ATTACHMENTS IS 1/4 OF FAILURE LOAD.
2. UPPER ATTACHMENTS WAY BE TO WOOD STRUCTURES ALSO

(1) PREVENT BENDING OF STRAP AT 90° BEND UNDER LOAD

4 UPPER ATTACHMENTS DETAIL

NOT TO SCALE

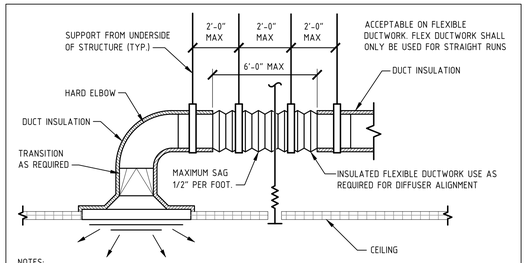

NOTES:

1. THIS CONFIGURATION TO BE USED ONLY WHEN SPACE RESTRAINTS WILL NOT ALLOW USE OF DIFFUSER BOOT.
2. NO FLEX DUCT SHALL BE USED ABOVE HARD CEILINGS OR FOR CLEAN ROOMS.
3. ALL FLEXIBLE DUCT CONNECTIONS SHALL BE BAND CLAMPED, SCREWED AND TAPED TO SOLID DUCT TO SEAL.

5 FLEXIBLE DUCTWORK DIFFUSER CONNECTION DETAIL

NOT TO SCALE

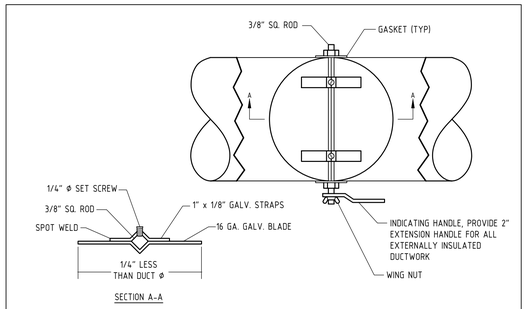

6 ROUND VOLUME DAMPER - UP TO 14"Ø

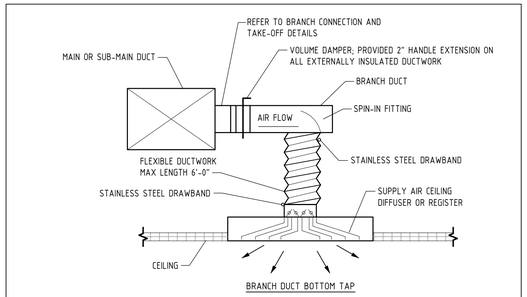

7 DIFFUSER/REGISTER CONNECTION DETAIL

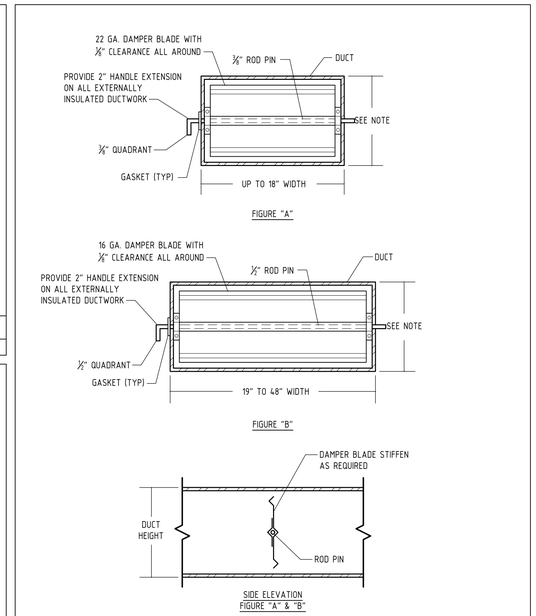

NOTE:

1. MAX HEIGHT FOR SINGLE BLADE DAMPER AS REQUIRED BY MANUFACTURER. FOR GREATER HEIGHT USE MULTI-BLADE CONTROL DAMPER.

8 VOLUME DAMPER DETAIL

RENOVATIONS TO THE EXETER TOWN HALL

742 TEN ROD RD, EXETER, RI, 02822

BREWSTER THORNTON GROUP ARCHITECTS LLP
317 Iron Horse Way, Suite 202
Providence, RI 02908
401.861.1600
brewsterthornton.com

ZAINO & ASSOCIATES
Zaino & Associates
183 PROVIDENCE-NEW LONDON TURNPIKE
NORTH STONINGTON, CT 06359

JOB NO.	DATE
2605	08/31/2026

ISSUE : **BID DOCUMENTS**

NO.	REVISION DESCRIPTION	DATE

SHEET TITLE

MECHANICAL DETAILS

SHEET

M300

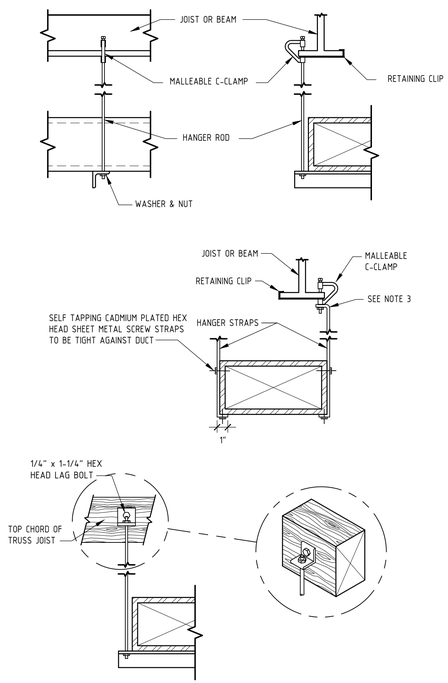

NOTES:

1. ALL SUPPLY AIR, RETURN AIR AND OUTDOOR AIR DUCTS SHALL BE WRAPPED EXTERNALLY WITH DUCT INSULATION AS PER MECHANICAL SPECIFICATIONS.
2. NO POP RIVETS ALLOWED, SELF-TAPPING SHEETMETAL SCREWS ONLY.
3. PREVENT BENDING OF STRAP AT 90° BEND UNDER LOAD
4. PROVIDE SUPPLEMENTAL STEEL WHERE NECESSARY TO SUPPORT DUCTWORK AT REQUIRED SPACING

HANGER SIZES FOR RECTANGULAR DUCT			
MAX SIDE	HANGER	HORIZONTAL SUPPORT ANGLE	MAX SPACING
30"	1" x 18 GA. STRAP	NONE REQUIRED	10'-0"
36"	1/4" ROUND ROD	1-1/2" x 1-1/2" x 1/8"	8'-0"
48"	1/4" ROUND ROD	2" x 2" x 1/8"	8'-0"
60"	5/16" ROUND ROD	2" x 2" x 1/8"	8'-0"
84"	3/8" ROUND ROD	2" x 2" x 1/8"	8'-0"

1 DUCT STRAP HANGER DETAIL

NOT TO SCALE

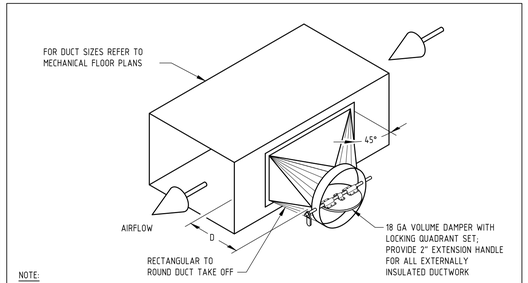

NOTE:

1. REFER TO MECHANICAL FLOOR PLANS FOR ALL DUCT DIAMETER (D).

2 RECTANGLE-TO-ROUND DUCTWORK TAKE OFF DETAIL

NOT TO SCALE

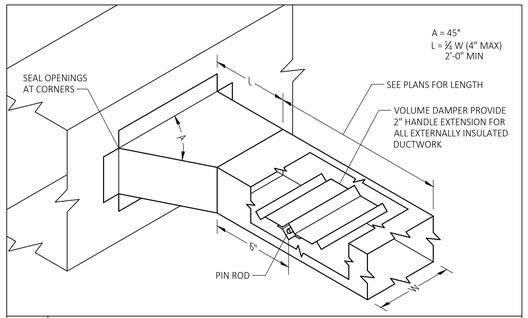

3 BRANCH CONNECTION (45°) DETAIL

NOT TO SCALE

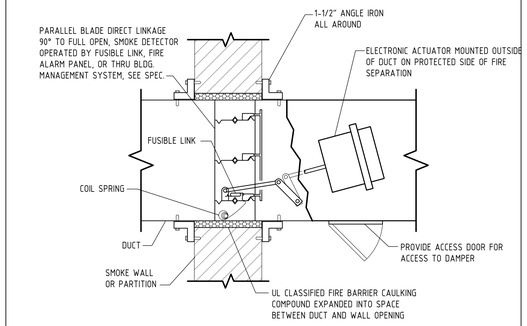

NOTES:

1. SMOKE DAMPER LOCATION AT SMOKE WALL OR PARTITION IS NOT A TYPICAL OCCURRENCE. PROVIDE SEALING AROUND DUCTWORK AT ALL PENETRATIONS THROUGH SMOKE WALLS.
2. MAXIMUM PRESSURE DROP ACROSS SMOKE DAMPERS SHOULD NOT EXCEED 0.1 INCHES OF WATER. DAMPER MANUFACTURER SHALL SUBMIT PRESSURE DROP FOR MAXIMUM AIR FLOW REQUIRED IN ASSOCIATED DUCT AND SHALL RESIZE SMOKE DAMPER AS REQUIRED TO MEET MAXIMUM PRESSURE DROP AND SHALL WORK WITH HVAC CONTRACTOR TO COORDINATE INSTALLATION.
3. HVAC CONTRACTOR SHALL PROVIDE DUCT TRANSITIONS AT SMOKE DAMPERS AS REQUIRED TO ACCOMMODATE REQUIRED SMOKE DAMPER SIZE.
4. SMOKE DAMPERS SHALL BE SQUARE OR RECTANGULAR WITH WIDTH AND HEIGHT IN ACCORDANCE WITH MANUFACTURER'S STANDARD SIZES, BUT IN NO CASE LESS THAN WIDTH AND HEIGHT OF ASSOCIATED DUCT SIZE OR SUCH THAT MAXIMUM ALLOWED PRESSURE DROP IS EXCEEDED.
5. DUCT IS REQUIRED WHETHER OF NOT IT IS SPECIFICALLY INDICATED ON THE FLOOR PLANS AT ALL COMPONENTS WITHIN DUCT WORK, INCLUDING BUT NOT LIMITED TO FIRE DAMPERS, SMOKE DETECTORS, MOTORIZED DAMPERS, AIR FLOW STATIONS, DUCT HUMIDIFIERS, AND THE ENTERING SIDE OF EVERY HEATING OR COOLING COIL OR ELEMENT.
6. DUCT ACCESS PANEL SHALL BE SIZED LARGE ENOUGH AND LOCATED IN A POSITION TO PERMIT ACCESS TO PERFORM THE REQUIRED SERVICE OR INSPECTION REQUIRED FOR THE COMPONENT.
7. THIS CONTRACTOR IS RESPONSIBLE FOR COORDINATING THE SIZE AND LOCATION OF ANY REQUIRED ARCHITECTURAL ACCESS PANEL TO FOLLOW THE ABOVE REQUIREMENTS.

4 SMOKE AND FIRE DAMPER DETAIL

NOT TO SCALE

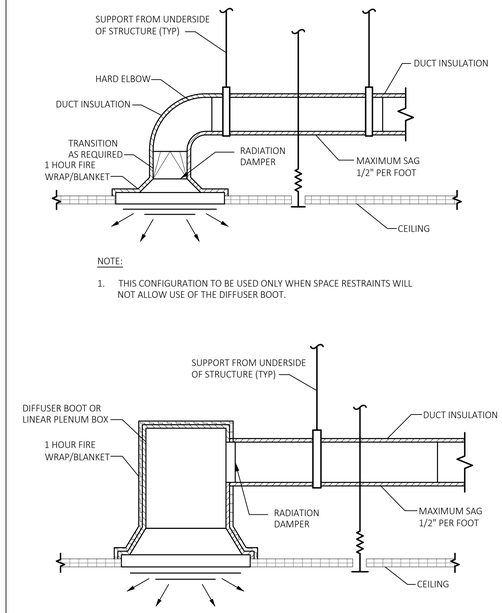

NOTE:

1. THIS CONFIGURATION TO BE USED ONLY WHEN SPACE RESTRAINTS WILL NOT ALLOW USE OF THE DIFFUSER BOOT.

5 DUCTWORK DIFFUSER/GRILLE CONNECTION DETAIL

NOT TO SCALE

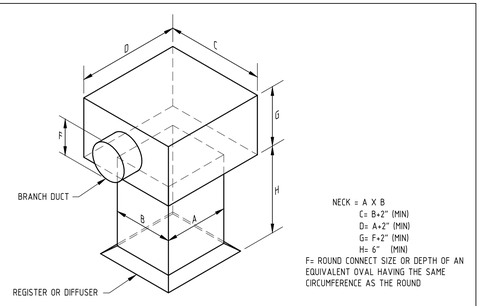

NECK = A X B
C= B+2" (MIN)
D= A+2" (MIN)
G= F+2" (MIN)
H= 6" (MIN)
F= ROUND CONNECT SIZE OR DEPTH OF AN EQUIVALENT OVAL HAVING THE SAME CIRCUMFERENCE AS THE ROUND

6 SQUARE DIFFUSER CONNECTION BOOT DETAIL

NOT TO SCALE

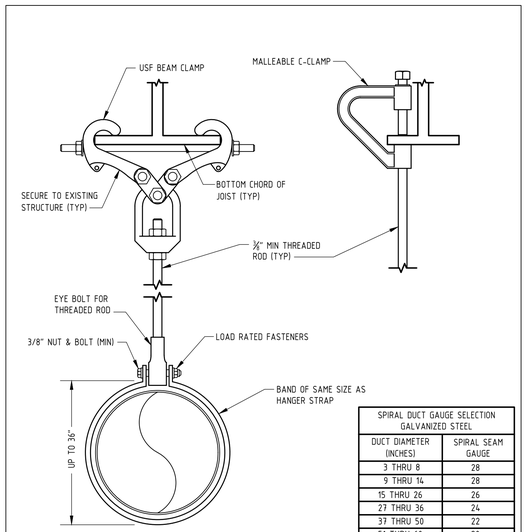

SPIRAL DUCT GAUGE SELECTION GALVANIZED STEEL	
DUCT DIAMETER (INCHES)	SPIRAL SEAM GAUGE
3 THRU 8	28
9 THRU 14	28
15 THRU 26	26
27 THRU 36	24
37 THRU 50	22
51 THRU 60	20
61 THRU 84	18

ROUND DUCT HANGER SPACING				
DUCT DIAMETER	MAX SPACING	WIRE DIAMETER	ROD DIAMETER	STRAP
3" THRU 10"	12'	(1) AT 12 GA.	3/8"	1" x 22 GA.
11" THRU 18"	12'	(2) AT 12 GA. OR (1) AT 8 GA.	3/8"	1" x 22 GA.
19" THRU 24"	12'	(2) AT 10 GA.	3/8"	1" x 22 GA.
25" THRU 36"	12'	(2) AT 8 GA.	3/8"	1" x 20 GA.

8 ROUND DUCT HANGER DETAIL

NOT TO SCALE

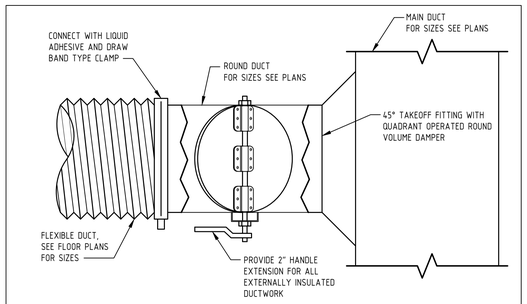

9 ROUND BRANCH TAKEOFF DETAIL

NOT TO SCALE

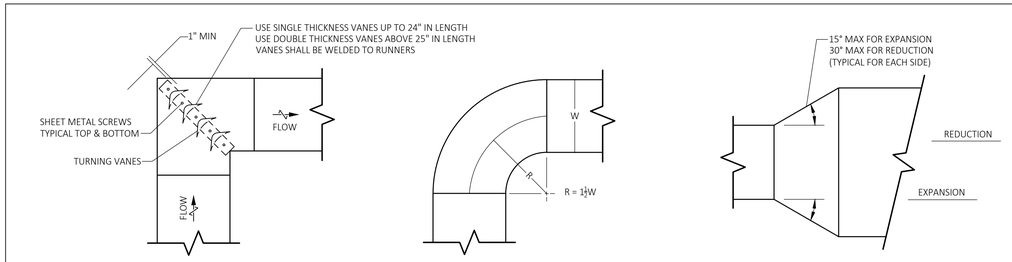

SQUARE DUCT ELBOW

ROUND DUCT ELBOW

TRANSITION

NOTE:

1. SQUARE THROAT - ROUND HEEL ELBOWS ARE NOT ALLOWED

7 DUCTWORK ELBOW AND TRANSITION DETAIL

NOT TO SCALE

RENOVATIONS TO THE EXETER TOWN HALL

742 TEN ROD RD, EXETER, RI, 02822

BREWSTER THORNTON GROUP ARCHITECTS LLP

317 Iron Horse Way,
Suite 202
Providence, RI 02908

401.861.1600
brewsterthornton.com

ZAINO & ASSOCIATES

Zaino & Associates
183 PROVIDENCE-NEW LONDON TURNPIKE
NORTH STONINGTON, CT 06359

JOB NO. 2605

DATE 08/31/2026

ISSUE : **BID DOCUMENTS**

NO.	REVISION DESCRIPTION	DATE

SHEET TITLE

MECHANICAL DETAILS

SHEET

M301

PART 1 - GENERAL PROVISIONS FOR MECHANICAL WORK

1.1. GENERAL REQUIREMENTS:

A. SCOPE OF WORK SHALL INCLUDE ALL LABOR, MATERIALS, TOOLS, EQUIPMENT, TRANSPORTATION, HOISTING, RIGGING, INSURANCE, ETC., TO PERFORM THE WORK AS INDICATED ON THE DRAWINGS AND HEREIN SPECIFIED FOR A COMPLETE INSTALLATION. ALL WORK SHALL BE IN ACCORDANCE WITH NATIONAL, STATE AND LOCAL CODES AND ORDINANCES HAVING JURISDICTION, AS INTERPRETED BY THE ARCHITECT/ENGINEER.

B. APPLY AND PAY FOR ALL NECESSARY INSPECTION FEES, LICENSES AND PERMITS REQUIRED BY THE PROPER AUTHORITIES HAVING JURISDICTION.

C. NO EXITS SHALL BE CLOSED WITHOUT THE WRITTEN PERMISSION OF THE OWNER AND LOCAL AUTHORITIES HAVING JURISDICTION.

D. ANY UTILITY OUTAGES OR SYSTEM SHUTDOWNS FOR CONSTRUCTION SHALL BE SCHEDULED WITH THE OWNER PRIOR TO COMMENCING OF WORK.

E. SUBMIT SHOP DRAWINGS OF ALL HVAC EQUIPMENT AND RECORD DRAWINGS FOR ALL WORK PROVIDED UNDER THIS CONTRACT TO THE OWNER FOR HIS USE PRIOR TO ORDERING, FABRICATING OR INSTALLING SAME.

F. ALL MATERIALS SHALL BE NEW. ALL EQUIPMENT SHALL BEAR THE U.L. LABEL.

E. CONTRACTOR SHALL PREPARE COMPOSITE WORKING "COORDINATION" DRAWINGS AND SECTIONS AT SCALE NOT LESS THAN ¼" = 1'-0" CLEARLY SHOWING HOW THEIR WORK IS TO BE INSTALLED IN RELATION TO WORK OF OTHER TRADES. THE CONTRACTOR SHALL IDENTIFY ANY CONFLICTS AND REQUEST ASSISTANCE FROM THE ARCHITECT / ENGINEER FOR ASSISTANCE IN RESOLVING A FIELD CONDITION IN ORDER TO COMPLETE THE WORK REQUIRED. NO ADDITIONAL COMPENSATION WILL BE GRANTED OR AWARDED FOR RESOLVING COORDINATION ISSUES SINCE THIS IS CONSIDERED PART OF THIS CONTRACTORS DUTIES. IF THE CONTRACTOR INSTALLS THEIR WORK BEFORE COORDINATING WITH OTHER TRADES OR AS TO CAUSE ANY INTERFERENCE WITH WORK OF OTHER TRADES THEY SHALL MAKE NECESSARY CHANGES TO THEIR WORK TO CORRECT THE CONDITION WITH OUT ADDITIONAL COST TO THE OWNER.

F. RECORD DRAWINGS: THE CONTRACTOR SHALL KEEP DAILY UPDATED ACCURATE RECORDS OF ALL DEVIATIONS IN WORK AS ACTUALLY INSTALLED FROM WORK INDICATED ON THE CONTRACT DRAWINGS. EACH CONTRACTOR SHALL RECORD CLEARLY, NEATLY, ACCURATELY, AND PROMPTLY AS WORK PROGRESSES THE FOLLOWING DATA: CHANGES MADE RESULTING FROM CHANGE ORDERS OR INSTRUCTIONS OR SKETCHES ISSUED BY THE A/E. CHANGES IN ROUTING MADE TO AVOID CONFLICT WITH OTHER TRADES OR STRUCTURAL CONDITIONS. FINAL LOCATION OF EQUIPMENT AND PANELS IF DIFFERENT THAN CONTRACT DOCUMENTS. THE RECORD DRAWINGS SHALL BE KEPT AT THE JOB SITE, AVAILABLE TO THE OWNER AT ALL TIMES AND LABELED AS "PROJECT RECORD INFORMATION - JOB SET". WHEN WORK IS COMPLETED, ONE COMPLETE SET OF MARKED-UP ORIGINAL PRINTS, UPDATED CAD DRAWINGS WITH ALL CHANGES LISTED ABOVE AND A CD WITH CAD FILES SHALL BE DELIVERED TO THE A/E FOR APPROVAL. ALL CAD FILES REQUESTED BY THE CONTRACTOR WILL BE GIVEN TO THE CONTRACTOR AT A COST OF $250.00 PER DRAWING/SHEET.

1.02. GUARANTEES:

A. ALL WORK, MATERIALS AND EQUIPMENT SHALL BE GUARANTEED AGAINST DEFECTS RESULTING FROM THE USE OF INFERIOR MATERIALS, EQUIPMENT, OR WORKMANSHIP FOR ONE YEAR FROM THE DATE OF FINAL COMPLETION OF THE CONTRACT, OR FROM FULL ACCEPTANCE BY THE OWNER, WHICHEVER IS EARLIER. ALL DEFECTIVE MATERIAL OR WORKMANSHIP AS WELL AS DAMAGES TO THE WORK OF ALL TRADES RESULTING FROM SAME SHALL BE REPLACED AT THE CONTRACTOR'S EXPENSE.

B. THE GUARANTEE PERIOD SHALL BE FOR ONE (1) YEAR FROM THE DATE OF ACCEPTANCE, WHICH SHALL BE THE DATE OF FINAL PAYMENT OR THE DATE OF FORMAL NOTICE OF ACCEPTANCE, WHICHEVER IS EARLIER.

C. CERTIFICATION SHALL BE SUBMITTED BY THE CONTRACTOR ATTESTING TO THE FACT THAT SPECIFIED PERFORMANCE CRITERIA ARE MET BY ALL EQUIPMENT.

D. IF, WITHIN ANY GUARANTEE PERIOD, REPAIRS OR CHANGES TO GUARANTEED WORK ARE REQUIRED AS A RESULT OF THE USE OF DEFECTIVE MATERIALS OR EQUIPMENT, INFERIOR WORKMANSHIP OR WORK THAT IS NOT IN ACCORDANCE WITH THE TERMS OF THE CONTRACT, AND UPON RECEIPT OF NOTICE FROM THE OWNER, THE FOLLOWING SHALL BE DONE WITHOUT EXPENSE TO THE OWNER:

1. REPAIR ALL DAMAGE TO THE BUILDING OR SITE/EQUIPMENT OR CONTENTS THEREOF WHICH IS THE RESULT OF THE USE OF DEFECTIVE MATERIALS OR EQUIPMENT OR INFERIOR WORKMANSHIP, OR OF WORK NOT IN ACCORDANCE WITH THE TERMS OF THE CONTRACT.
2. MAKE GOOD ANY WORK OR MATERIALS, OR THE EQUIPMENT AND CONTENTS OF SAID BUILDING OR SITE DISTURBED IN FULFILLING ANY SUCH GUARANTEE.
3. IN FULFILLING THE REQUIREMENTS OF THE CONTRACT OR OF ANY GUARANTEE EMBRACED IN OR REQUIRED THEREBY, ANY WORK GUARANTEED UNDER ANOTHER CONTRACT IS DISTURBED, RESTORE SUCH DISTURBED WORK TO ORIGINAL CONDITION AND GUARANTEE SUCH RESTORED WORK TO THE SAME EXTENT AS IT WAS GUARANTEED UNDER SUCH OTHER CONTRACT.
4. IF UPON FAILURE TO PROCEED PROMPTLY AFTER NOTICE TO COMPLY WITH THE TERMS OF THE GUARANTEE, THE OWNER MAY HAVE THE DEFECTS CORRECTED AND CONTRACTOR AND HIS SURETY SHALL BE LIABLE FOR ALL EXPENSES INCURRED.

1.03. CONTRACTORS RESPONSIBILITIES:

A. CONTRACTOR SHALL BE HELD RESPONSIBLE FOR ANY INJURIES TO PEOPLE, EMPLOYEES OR DAMAGE DONE TO BUILDING PREMISES OR ADJOINING AREAS OR TO OTHER WORK RESULTING FROM EXECUTION ON HIS PART OF WORK, IN ANY MANNER WHATSOEVER.

B. CONTRACTOR SHALL BE RESPONSIBLE FOR PROPER PROTECTION OF HIS WORK, MATERIALS, PEOPLE OR EMPLOYEES FROM INJURY OR LOSS DONE BY OTHERS AND SHALL MAKE GOOD SUCH INJURY AT HIS OWN EXPENSE.

C. DRAWINGS DO NOT INCLUDE NECESSARY COMPONENTS FOR CONSTRUCTION SAFETY.

D. ENGINEER SHALL NOT BE RESPONSIBLE FOR THE SAFETY OF CONTRACTOR'S EMPLOYEES, MATERIALS OR EQUIPMENT.

1.4. COORDINATION AND INTERPRETATION OF DRAWINGS:

A. THIS CONTRACTOR, PRIOR TO SUBMITTING BID SHALL VISIT THE PROJECT SITE TO BECOME FAMILIAR WITH ALL EXISTING CONDITIONS AND TO INSPECT THAT ALL PROVISIONS HAVE BEEN MADE FOR ALL ASPECTS OF THIS PROJECT.

B. IF DISCREPANCIES EXIST BETWEEN DRAWINGS AND/OR SITE CONDITIONS, THE HVAC CONTRACTOR SHALL NOTIFY THE ENGINEER AND THE OWNER PRIOR TO SIGNING OF CONTRACT. REQUESTS FOR COMPENSATION FOR EXTRA WORK, WHICH WOULD HAVE BEEN EVIDENT BY COMPLIANCE WITH THE PREVIOUS STATEMENT, WILL NOT BE CONSIDERED. MECHANICAL EQUIPMENT AND SUCH OTHER APPARATUS WHICH MAY REQUIRE MAINTENANCE OR INSPECTION FROM TIME TO TIME SHALL BE MADE EASILY ACCESSIBLE. ALTHOUGH THE EQUIPMENT MAY BE SHOWN ON THE DRAWINGS IN CERTAIN LOCATIONS, THE CONSTRUCTION MAY DISCLOSE THAT SUCH LOCATIONS DO NOT MAKE ITS POSITION READILY ACCESSIBLE. IN SUCH CASES, THE OWNER OR HIS REPRESENTATIVE SHALL BE NOTIFIED BEFORE ADVANCING THE CONSTRUCTION TO A STAGE WHERE A CHANGE WILL REFLECT ADDITIONAL EXPENSE. NO COMPENSATION WILL BE CONSIDERED FOR WORK INSTALLED WHICH IS NOT IN COMPLIANCE WITH THE DRAWINGS, SPECIFICATIONS, LOCAL CODES, AND MANUFACTURER'S REQUIRED CLEARANCES FOR ACCESS AND SERVICING OF EQUIPMENT.

C. IT SHALL BE THE RESPONSIBILITY OF THE HVAC CONTRACTOR TO STUDY ALL DRAWINGS AND DETAILS SO THAT THE INSTALLATION OF ALL NEW WORK CAN BE FULLY COORDINATED. COORDINATE WITH ALL TRADES TO AVOID INTERFERENCE OF EQUIPMENT, EXISTING AND NEW, OF ALL TRADES. COORDINATION DRAWINGS ARE THE RESPONSIBILITY OF THIS CONTRACTOR.

D. HVAC WORK IS INDICATED DIAGRAMMATICALLY. EXACT LOCATION OF ALL COMPONENTS ARE TO BE DETERMINED IN THE FIELD AND BY THE ACTUALBUILDING CONDITIONS. EQUIPMENT, DUCTS OR PIPES INTERFERING WITH OTHER INSTALLATIONS SHALL BE RELOCATED AS REQUIRED AT NO ADDITIONAL COST TO THE OWNER.

E. HVAC CONTRACTOR SHALL COORDINATE ALL WALL, CEILING, FLOOR, ROOF, AND BEAM PENETRATIONS WITH ARCHITECT, STRUCTURAL ENGINEER, OWNER, AND EXISTING CONDITIONS PRIOR TO INSTALLATION.

1.05. DEMOLITION:

A. ALL DEMOLITION OF INACTIVE HVAC SYSTEMS WITHIN THE CONTRACT LIMITS SHALL BE BY THE GENERAL CONTRACTOR. EACH BIDDER FOR WORK UNDER THIS SECTION OF THE SPECIFICATION SHALL INCLUDE IN THEIR BID ALL COSTS INVOLVED IN DISCONNECTING ALL PIPING, DUCTWORK, AND UNUSED CONTROL WIRING SERVING EXISTING HVAC EQUIPMENT THAT IS TO BE REMOVED. COORDINATE ALL SHUTDOWN OF EXISTING SYSTEMS AS REQUIRED, WITH THE OWNER, THROUGH THE GENERAL CONTRACTOR.

B. CONTRACTOR SHALL VISIT THE SITE AND IDENTIFY EXISTING CONDITIONS AND DIFFICULTIES THAT WILL AFFECT WORK OF THIS SECTION. DEMOLITION WORK WILL REQUIRE CAREFUL SITE EXAMINATION PRIOR TO BIDDING.

C. PRIOR TO COMMENCING DEMOLITION, CONTRACTOR SHALL IDENTIFY WITH OWNER ANY EQUIPMENT TO BE RETURNED TO THE OWNER AFTER DEMOLITION. ALL OTHER DEBRIS SHALL BE DISPOSED OF BY THIS CONTRACTOR IN ACCORDANCE WITH ALL APPLICABLE REGULATIONS.

D. THE MECHANICAL CONTRACTOR SHALL BE RESPONSIBLE FOR THE DISCONNECTION AND REMOVAL OF THE EXISTING MECHANICAL EQUIPMENT. DUCTWORK, PIPING, VALVES, ETC. IN DESIGNATED AREAS. CUT & CAP PIPING AND DUCTWORK BACK TO MAINS.

E. THIS CONTRACTOR SHALL PROTECT WORK AGAINST INJURY OR DAMAGE; AND CAREFULLY STORE MATERIAL AND EQUIPMENT TO BE RELOCATED. OPEN ENDS OF WORK SHALL BE CLOSED WITH TEMPORARY COVERS OR PLUGS DURING STORAGE AND CONSTRUCTION TO PREVENT ENTRY OF OBSTRUCTING MATERIAL.

1.06. EXECUTION:

A. ALL ROUGH CUTTING, CORE DRILLING AND PATCHING REQUIRED FOR INSTALLATION OF THE MECHANICAL SYSTEM SHALL BE THE RESPONSIBILITY OF THIS CONTRACTOR. ALL FINISH PATCHING RELATIVE TO THIS CONTRACTOR'S WORK SHALL BE THE RESPONSIBILITY OF OTHER TRADES IN ACCORDANCE WITH OTHER SECTIONS OF THIS SPECIFICATION. COORDINATE ALL WORK FOR A COMPLETE AND FINISHED INSTALLATION.

B. INSTALL ALL MATERIALS, ACCESSORIES AND EQUIPMENT ACCORDING TO MANUFACTURER'S INSTALLATION INSTRUCTIONS FOR COMPLETE AND OPERABLE SYSTEMS AS INDICATED ON THE DRAWINGS AND PER THE MANUFACTURER'S INSTRUCTIONS.

C. INSTALLATION OF THE HVAC SYSTEM SHALL PERMIT ACCESSIBILITY FOR SERVICE AND/OR REPLACEMENT OF NEW AND EXISTING EQUIPMENT.

D. ALL MISCELLANEOUS STRUCTURAL SUPPORTS REQUIRED FOR HVAC EQUIPMENT INSTALLATION SHALL BE PROVIDED BY MECHANICAL CONTRACTOR.

E. WHERE DUCTWORK PENETRATES ANY SMOKE AND/OR FIRE RATED PARTITIONS PROVIDE UL LISTED DYNAMIC FIRE AND/OR SMOKE DAMPERS PER NFPA GUIDELINES. INSTALL PER MANUFACTURES INSTRUCTIONS INCLUDING AN APPROVED ACCESS PANEL.

F. ALL CEILING MOUNTED EQUIPMENT SHALL BE INSTALLED IN SUCH A WAY THAT LIGHTS, PIPING, AND DUCTWORK DO NOT BLOCK ACCESS TO UNITS AND RELATED ACCESSORIES.

G. EXACT LOCATION OF CEILING DIFFUSERS, GRILLES AND REGISTERS SHALL BE DETERMINED BY THE ARCHITECTURAL REFLECTED CEILING PLAN. ENGINEER SHALL APPROVE FINAL LOCATION IF LOCATION OF CEILING DIFFUSERS SHOWN ON THE MECHANICAL PLANS ARE DIFFERENT THEN THE REFLECTED CEILING PLANS BY MORE THEN ONE CEILING TILE.

H. EXACT ELEVATION FOR SIDE WALL DIFFUSERS, REGISTERS AND GRILLES SHALL BE APPROVED BY THE OWNER BEFORE INSTALLATION.

I. INSTALL ROOM THERMOSTATS 48" (MAXIMUM) ABOVE FINISHED FLOOR OR AS OTHERWISE DIRECTED BY THE OWNER.

J. CONTRACTOR TO DRAIN, FLUSH, FILL AND BALANCE ALL SYSTEMS AS REQUIRED TO COMPLETE THE WORK.

1.07. SMOKE AND FIRSTOPPING:

A. FIRESTOP ALL PENETRATIONS BETWEEN FLOORS & FIRE RATED WALLS WITH APPROVED FIRE STOPPING ASSEMBLIES AS MANUFACTURED BY 3M INDUSTRY, DOW CORNING, OR HILTI. THE ASSEMBLIES SHALL COMPLY WITH THE LATEST APPLICABLE REQUIREMENTS OF THE: BUILDING CODE, NFPA STANDARDS AND OWNERS INSURANCE COMPANY. PROVIDE UL LISTED DETAIL FOR EACH TYPE OF PROPOSED APPLICABLE ASSEMBLIES WITH OF THE MECHANICAL EQUIPMENT SUBMITTAL.

B. ALL PIPING PASSING THROUGH FIRE-RATED WALLS, SLABS, FLOORS, ETC. SHALL HAVE STEEL SLEEVES EXTENDING 2" BEYOND SURROUNDING SURFACE. THE SPACE BETWEEN THE PIPES AND THE SLEEVES SHALL BE COMPLETELY PACKED WITH AN APPROVED FIRESTOPPING MATERIAL. AFTER FIRESTOPPING MATERIAL HAS BEEN INSTALLED AROUND PIPES, A 26" GAUGE SHEET METAL COLLAR SHALL BE SECURED AROUND THE PIPE TO INSURE TIGHTNESS. .

1.9. EQUIPMENT, VALVE, AND PIPE IDENTIFICATION:

A. AVAILABLE MANUFACTURERS: SUBJECT TO COMPLIANCE WITH REQUIREMENTS, PRODUCTS ARE LIMITED TO SETON, BRADY OR BRIMAR WHOM HAVE A MINIMUM OF 5 YEARS EXPERIENCE IN THE MANUFACTURING OF MECHANICAL IDENTIFICATION PRODUCTS.

D. VALVE INDEXING AND VALVE CHART:

1. USE BLACK LAMINATED PHENOLIC TAGS 2" IN DIAMETER WITH INCISED LETTERS 3/8" HIGH.
2. USE BRASS "S" HOOKS AND/OR BRASS CHAIN TO ATTACH TO VALVE.
3. USE PRINTING 1/8" HIGH FOR CHARTS.
4. PLACE CHARTS IN METAL FRAME WITH NON-GLARE GLASS.

E. 5. INCORPORATE THE BUILDINGS OLD VALVE CHART WITH A NEW VALVE CHART TO MAKE ONE COMPLETE VALVE CHART.

PART 2 - EQUIPMENT

2.01. DUCTWORK:

A. ALL DUCTWORK SHALL BE OF TOP GRADE GALVANIZED STEEL, CONSTRUCTED AND SUPPORTED AS PER S.M.A.C.N.A. LOW PRESSURE STANDARDS. SQUARE THROAT, ROUND HEEL ELBOWS ARE NOT ACCEPTABLE. ALL ELBOWS SHALL BE SQUARE WITH TURNING VANES OR LONG RADIUS TYPE. ALL JOINTS, SEAMS, AND FITTINGS SHALL BE AIR AND WATER TIGHT USING SOLDER JOINTS, COMPOUND OR SILICONE AND SHALL BE FORMED TO PROVIDE A MINIMUM RESISTANCE TO THE AIR FLOW.

B. ALL RECTANGULAR DUCTS TO BE INSULATED SHALL BE PANELED FOR STIFFENING. ALL OTHER DUCTWORK SHALL BE CROSS BROKEN TO PREVENT VIBRATION.

C. ALL DUCTWORK CONSTRUCTION SHALL BE OF FABRICATED SHEET METAL (NO DUCT BOARD WILL BE ACCEPTABLE.) AND BE BUILT IN ACCORDANCE WITH `SMACNA' STANDARDS AND PUBLICATION TITLED "HVAC DUCT CONSTRUCTION STANDARDS".

D. DUCTWORK DIMENSIONS INDICATED ON DRAWINGS ARE NET INSIDE DIMENSIONS REQUIRED FOR AIRFLOW. INCREASE DUCTWORK TO ALLOW FOR INTERNAL INSULATION THICKNESS.

E. FLEXIBLE CONNECTION: ATTACH AT INLET AND OUTLET OF FANS SO THAT METAL IS SEPARATED BY 6" MINIMUM AND SO THAT JOINT IS AIR TIGHT. PROVIDE FLEXIBLE CONNECTION AT ALL MOTORIZED EQUIPMENT AND AT BUILDING EXPANSION JOINTS. USE NEOPRENE HEAVY DUTY TYPE 6.0 INCH CLEAR DUCT TO DUCT.

F. ALL EXISTING & NEW DUCTWORK SEAMS AND JOINTS SHALL BE SEALED WITH MASTIC BEFORE INSULATION IS INSTALLED. INSPECTION OF THIS SHALL BE COMPLETED BY OWNER BEFORE INSULATION IS INSTALLED.

G. ALL FLEX DUCT USED SHALL BE OF THE INSULATED TYPE, AND SHALL NOT EXCEED SIX FEET (6'-0") IN LENGTH.

H. FLEX DUCT CAN BE USED FROM THE DIFFUSER ADAPTER BACK TO THE RIGID SHEET METAL. DO NOT USE FOR CHANGE IN DIRECTION.

I. LOW PRESSURE INSULATED FLEXIBLE DUCT SHALL BE A MAXIMUM OF SIX (6) FEET LONG AND SHALL BE SIZED AS FOLLOWS:

CFM	FLEX DUCT DIAMETER
0-110	6"
111-250	8"
251-420	10"

J. QUADRANT DAMPERS OR BLASTGATES SHALL BE PROVIDED WITH A LOCKING DEVICE TO PERMANENTLY SET AIR VOLUME.

K. DUCT SUPPORTS SHALL BE SPACED NOT MORE THAN 8'-0" O.C. AND SHALL BE STEEL STRAP HANGERS, (PERFORATED STRAP NOT PERMITTED) FOR DUCTS UP TO 30" WIDE; ANGLE HANGERS FOR DUCTS OVER 20" WIDE. STRAP HANGERS SHALL BE 1" x 16 GAUGE MINIMUM EXTENDING ON BOTH SIDES OF DUCT AND TURNING UNDER 2", FASTENED TO SIDES AND BOTTOM WITH SHEET METAL SCREWS.

L. ACCESS DOORS: WHEREVER MECHANISMS REQUIRING ACCESS FOR OPERATION ARE CONCEALED IN STRUCTURE AND WHEREVER ALSO INDICATED ON THE DRAWINGS OR WHERE SO DIRECTED, CONTRACTOR SHALL SUPPLY ACCESS DOORS OF SIZES NECESSARY TO PROVIDE READY ACCESS TO CONCEALED ITEMS. USE PYRO/GARD ACCESS DOORS, OR APPROVED EQUAL. ACCESS DOORS SHALL MATCH RATING TO WHICH IT IS INSTALLED. DOORS SHALL BE ONE INCH INSULATED HINGE CAM MODELS.

2.02. DUCT INSULATION:

A. ALL INSULATION SHALL CONFORM WITH ALL FIRE HAZARD RATINGS AS DETERMINED BY NFPA 255, "METHOD OF TEST OF SURFACE BURNING CHARACTERISTICS OF BUILDING MATERIALS", ASTM E84 OR UL 723. IN GENERAL, THE FIRE HAZARD RATING SHALL NOT EXCEED A FLAME SPREAD RATING OF 25 OR SMOKE DEVELOPED RATING OF 50.

B. NEW AND EXISTING SUPPLY, RETURN AND OUTSIDE AIR INTAKE DUCTWORK WITHIN THE LIMITS OF THIS PROJECT SHALL BE INSULATED WITH 2" MIN R-8 THICK FIBERGLASS DUCT INSULATION AS MANUFACTURED BY OWENS CORNING OR JOHNS MANVILLE. INSULATION SHALL HAVE A FOIL-FACED VAPOR BARRIER.

1. EXTERIOR OF DUCT IN CONCEALED SPACES: WRAP TIGHTLY, BUTT CIRCUMFERENTIAL JOINTS AND OVERLAP LONGITUDINAL JOINTS A MINIMUM OF TWO INCHES. ADHERE TO DUCT WITH FOUR-INCH STRIPS OF INSULATION BONDING ADHESIVE 8" OC. DUCTWORK OVER 24" WIDE: SECURE WITH MECHANICAL FASTENERS NOT MORE THAN 18" OC. CIRCUMFERENTIAL JOINTS: SECURE THE TWO-INCH FLANGE OF THE FACING WITH 9/16" FLARE DOOR STAPLES 6" OC AND TAPE WITH MINIMUM OF THREE-INCH-WIDE, FOIL REINFORCED KRAFT TAPE. TAPE PIN PENETRATIONS AND PUNCTURES. IN EXPOSED APPLICATIONS, COVER JOINTS WITH THREE-INCH-WIDE, FOIL REINFORCED KRAFT TAPE.

C. AT DAMPER AND DUCT ACCESS DOOR LOCATIONS, CUT INSULATION BACK TO EXPOSE DAMPER ADJUSTER AND ACCESS DOOR. TAPE SEAL INSULATION TO DUCT. PROVIDE AN INSULATION "DOOR" TO COVER THE ACCESS POINT AND MARK THE "DOOR" WITH HIGHLY VISIBLE MARKER OR TAPE.

2.03. DAMPERS:

A. ALL DAMPERS SHALL BE AT LEAST ONE GAUGE HEAVIER THAN DUCT IN WHICH INSTALLED, REINFORCED AS NECESSARY AND EQUIPPED WITH QUADRANT AND LOCKING DEVICE.

B. MANUAL DAMPERS SHALL BE YOUNG REGULATOR OPPOSED BLADE TYPE WITH FACTORY INSTALLED LOCKING HAND QUADRANTS EXTENDED 2".

2.04. VOLUME DAMPER:

A. PROVIDE YOUNG REGULATOR MANUAL ADJUSTABLE RECTANGULAR OPPOSED BLADE DAMPERS FOR DUCT HEIGHTS LESS THAN 12" WITH FACTORY-INSTALLED LOCKING HAND QUADRANTS EXTENDED 2" FOR ALL DAMPERS INSTALLED IN EXTERNALLY INSULATED DUCT: ON EACH SUPPLY, RETURN AND GENERAL EXHAUST DUCT TAKE-OFF & AT EACH TAKE-OFF TO REGISTER, GRILLE OR DIFFUSER.

B. DAMPERS ARE MANUFACTURED APPROXIMATELY 5/16" SMALLER IN WIDTH AND 1/8" SMALLER IN HEIGHT THAN SIZE OF DUCT IN WHICH THEY ARE INSTALLED; E.G., NOMINAL DAMPER SIZE IS 24" X 10"; ACTUAL SIZE IS APPROXIMATELY 23-11/16" X 9-7/8".

C. DAMPER FRAME SHALL BE CONSTRUCTED OF #6063 EXTRUDED ALUMINUM REINFORCED CHANNEL WITH MINIMUM THICKNESS OF .050". OPPOSED DAMPER BLADES SHALL BE #6063 EXTRUDED ALUMINUM WITH MINIMUM THICKNESS OF .050" AND SHALL INCLUDE REINFORCING RIBS. EACH BLADE SHALL BE SUPPORTED IN THE DAMPER FRAME BY INDIVIDUAL TEFLON AXLE BEARINGS, AND SHALL BE DRIVEN BY STAINLESS STEEL CONNECTING SLIDE LINKAGE CONTROLLED BY 3/8" SQUARE STEEL CONTROL SHAFT.

D. DAMPERS 12" AND LARGER IN HEIGHT SHALL BE OPPOSED MULTI-BLADE EQUAL TO GREENHECK, NAILOR, OR VENT PRODUCTS.

E. DAMPER BLADES SHALL BE TWO GAUGES HEAVIER THAN ADJOINING DUCTWORK, AND SHALL BE RIVETED TO SUPPORTING RODS. HEM OVER EDGES PARALLEL TO RODS.

F. BRACKETS SHALL BE GALVANIZED METAL, SECURED TO DUCTWORK WITH SHEET METAL SCREW WITH LOCKING QUADRANT ARMS (SEE SEAL CLASS SECTION FOR ADDITIONAL REQUIREMENTS). PROVIDE 2" HANDLE EXTENSION FOR ALL DAMPERS ON EXTERNALLY INSULATED DUCTWORK.

G. WHERE DAMPERS ARE INACCESSIBLE PROVIDE REMOTE VOLUME DAMPER BY YOUNG REGULATOR MODEL BOWDEN CABLE WITH CONTROL KIT MODEL 270-275, WITH YOUNG 830A-CC-2 VOLUME DAMPER. INSTALL DAMPER OPERATOR INSIDE DUCTWORK NEXT TO GRILLE FOR EASY ACCESSIBILITY. THE 3/8" ROD BETWEEN REGULATOR AND DAMPER SHALL BE PROVIDED BY THIS CONTRACTOR.

H. CONSTANT AIR REGULATORS, CAR-II, BY ALDES SHALL BE PERMITTED IN LIEU OF MANUAL VOLUME DAMPERS ONLY FOR SCENARIOS WHERE CONSTANT AIRFLOW IS DESIRED AT ALL TIMES.

2.05. CONTROL DAMPER:

A. PROVIDE CONTROL DAMPERS WHEN INDICATED ON THE DRAWINGS.

B. BEARINGS SHALL BE MOLDED SYNTHETIC OR BRONZE OLITE.

C. LINKAGE SHALL BE CONCEALED IN THE FRAME.

D. DAMPERS SHALL BE OPPOSED BLADE IN ALL LOCATIONS EXCEPT MIXING PLENUMS, WHERE PARALLEL BLADES SHALL BE POSITIONED TO DIRECT AIR STREAMS INTO EACH OTHER, THUS FACILITATING MIXING.

E. FURNISH SINGLE OR MULTIPLE BLADE AUTOMATIC AND SMOKE (UL555S) RATED DAMPERS FOR INSTALLATION UNDER DUCTWORK PARAGRAPH AS REQUIRED..

F. PROVIDE ONE LINKAGE CONNECTION POINT PER EIGHT SQUARE FEET OF SECTION AREA, EQUALLY SPACED. SECTIONS SHALL NOT EXCEED 48"x48". PROVIDE SHAFT LINKAGE (1/2" MINIMUM BAR WITH CRANKDOWN ARMS ATTACHED TO BLADES) ON DAMPERS 12 FEET OR WIDER. DAMPERS 12 FEET OR WIDER AND MORE THAN FOUR FEET HIGH SHALL HAVE ONE LINE SHAFT FOR EACH FOUR FEET OF HEIGHT, OR ANY INCREMENT THEREOF; WHERE SIZE OF DAMPER REQUIRED MORE THAN ONE LINE SHAFT, SPACING SHALL BE EQUAL.

G. SMOKE DAMPERS SHALL BE UL555S APPROVED, LEAKAGE CLASS 1, 250°F.

H. DAMPER FRAMES SHALL BE 13 GAUGE GALVANIZED SHEET METAL WITH FLANGES FOR DUCT-MOUNTING.

I. DAMPER BLADES SHALL NOT EXCEED 6" IN WIDTH. BLADES SHALL BE SUITABLE FOR DUCT VELOCITY PERFORMANCE.

J. DAMPER BEARINGS SHALL BE NYLON. BUSHINGS THAT TURN IN BEARINGS SHALL BE OIL-IMPREGNATED, SINTERED METAL.

K. ASSEMBLED MULTIPLE DAMPER SECTIONS SHALL INCORPORATE MULLION SUPPORTS TO PREVENT FAILURE OF SECTIONAL ASSEMBLY.

L. PROVIDE REPLACEABLE BUTYL RUBBER SEALS, ALONG TOP, BOTTOM AND SIDES OF FRAME AND ALONG EACH BLADE. SEALS SHALL PROVIDE TIGHT CLOSING AND LOW LEAKAGE 48"x48" DAMPER SECTION SHALL HAVE LEAKAGE LESS THAN 8 CFM/SF AT 4" WG DIFFERENTIAL PRESSURE. SUBMIT LEAKAGE AND FLOW CHARACTERISTIC CHARTS FOR APPROVAL. DAMPERS SHALL BE HONEYWELL, INC. #D643 SERIES, JOHNSON CONTROLS, INC. #D-1330 SERIES, RUSKIN SD-50 OR GREENHECK.

M. THE AFOREMENTIONED CONTROL DAMPERS SHALL FAIL CLOSED.

2.06. REGISTERS, GRILLES & DIFFUSERS:

A. APROVIDE ALUMINUM CONTRUCTION DIFFUSERS, REGISTERS AND GRILLES WITH SIZES AS NOTED ON THE DRAWINGS AND HEREIN SPECIFIED. REGISTERS AND GRILLES SHALL BE AS MANUFACTURED BY KRUEGER, METALAIRE, TITUS, OR PRICE.

B. DISTRIBUTION DEVICES SHALL BE FACTORY PRIMED AND FINISH PAINTED BY THE MANUFACTURER IN COLOR AS APPROVED BY THE ARCHITECT, DURING SHOP DRAWINGS.

C. COORDINATE GRILLES WITH CEILING AND WALL CONSTRUCTION. REFER TO ARCHITECTURAL DRAWINGS FOR EXACT LENGTHS AND FOR FRAMING AND MITERING ARRANGEMENTS THAT MAY DIFFER FROM THOSE SHOWN ON HVAC DRAWINGS.

D. INSTALL IN STRICT ACCORDANCE WITH THE MANUFACTURER'S INSTALLATION INSTRUCTIONS.

2.07. PIPING INSULATION:

A. FIBERGLASS PIPE INSULATION SHALL BE BY OWENS CORNING TYPE SSL-II OR APPROVED EQUAL BY JOHNS MANVILLE OR CERTAINTEED. INSULATION SHALL HAVE FACTORY APPLIED ALL-SERVICE JACKET (ASJ) AND TWO-COMPONENT ADHESIVE CLOSURE SYSTEM, RATED FOR A MAXIMUM SERVICE TEMPERATURE OF 850°F. FOR LARGE PIPE SIZES WHERE SSL-II IS NOT AVAILABLE, THE SINGLE ADHESIVE SSL CLOSURE MAY BE SUBSTITUTED. CIRCUMFERENTIAL JOINTS SHALL BE SEALED BY BUTT STRIPS HAVING A TWO-COMPONENT SEALING SYSTEM.

1. PIPING SMALLER THAN 1-1/2" SHALL HAVE A MINIMUM INSULATION THICKNESS OF 1-1/2". THICKNESS TO MEET LOCAL CODE REQUIREMENT.
2. PIPING 1-1/2" OR LARGER SHALL HAVE A MINIMUM INSULATION THICKNESS OF 2". THICKNESS TO MEET LOCAL CODE REQUIREMENT.
3. INSULATION THICKNESS IS BASED ON A "K" VALUE NOT EXCEEDING 0.27 BTU PER INCH/H*SQ.FT.*°F.

B. FITTINGS AND VALVES SHALL BE INSULATED WITH PRE-FORMED FIBERGLASS FITTINGS. THICKNESS SHALL BE EQUAL TO ADJACENT PIPE INSULATION. FINISH SHALL BE WITH PRE-FORMED PVC FITTING COVERS.

C. FLANGES, COUPLINGS AND VALVE BONNETS SHALL BE COVERED WITH AN OVERSIZED PIPE INSULATION SECTION SIZED TO PROVIDE THE SAME INSULATION THICKNESS AS ON THE MAIN PIPE SECTION. AN OVERSIZED INSULATION SECTION SHALL BE USED TO FORM A COLLAR BETWEEN THE TWO INSULATION SECTIONS WITH LOW-DENSITY BLANKET INSULATION BEING USED TO FILL GAPS. JACKETING SHALL MATCH THAT USED ON STRAIGHT PIPE SECTIONS. WHERE FITTINGS ARE TO BE LEFT EXPOSED, INSULATION ENDS SHOULD BE BEVELED AWAY FROM BOLTS FOR EASY ACCESS.

D. REFRIGERANT PIPING: SEE REFRIGERANT PIPE INSULATION SECTION.

PART 3 - EXECUTION

3.01 AUTOMATIC TEMPERATURE CONTROLS:

A. IT IS THE INTENT OF THESE SPECIFICATIONS THAT THIS CONTRACTOR BE RESPONSIBLE FOR ALL DEVICES, TRANSFORMERS, AND WIRING (REGARDLESS OF VOLTAGE) NECESSARY TO PROVIDE THE SEQUENCES AS SPECIFIED HEREIN.

B. PROVIDE INCIDENTAL 110V POWER WIRING TO PANELS AND CONTROL TRANSFORMERS WHERE NOT SHOWN ON ELECTRICAL DRAWINGS.

3.02 BALANCING, ADJUSTING, TESTING, & CLEANING:

A. ALL HVAC SYSTEMS SHALL BE BALANCED BY AN INDEPENDENT TESTING AND BALANCING AGENCY CERTIFIED BY AABC. ALL TESTING SHALL BE IN ACCORDANCE WITH AABC & NATIONAL STANDARDS FOR FIELD MEASUREMENT AND INSTRUMENTATION, FORM #81266. SYSTEMS SHALL BE ADJUSTED TO FLOW AND AIR QUANTITIES DESIGNED. A WRITTEN REPORT SHALL BE SUBMITTED TO ENGINEER, ARCHITECT, AND OWNER FOR REVIEW.

B. PROVIDE QUALIFIED PERSONNEL, EQUIPMENT, APPARATUS AND SERVICES FOR STARTUP TESTING AND BALANCING OF MECHANICAL SYSTEMS FOR QUANTITIES INDICATED ON DRAWINGS UPON COMPLETION OF INSTALLATION. BALANCE SYSTEMS IN ACCORDANCE WITH CODES, STANDARDS, REGULATIONS AND AUTHORITIES HAVING JURISDICTION. CONTRACTOR SHALL USE RECENTLY CALIBRATED EQUIPMENT COMPATIBLE WITH INSTALLED EQUIPMENT AND SUBMIT BALANCING REPORT TO THE ENGINEER.

C. HYDRONIC BALANCING: BALANCE SYSTEM TO GPM FLOWS INDICATED. TAG EACH BALANCING DEVICE WITH GPM OF FINAL BALANCE AND POSITION OF BALANCE POINT.

D. AIR BALANCING: BALANCE SYSTEM TO CFM AIRFLOW INDICATED. TAG EACH BALANCING DEVICE WITH CFM OF FINAL BALANCE AND POSITION OF BALANCE POINT.

E. ALL MOTORIZED DAMPERS SHALL BE INDEXED TO FULL OPEN (100%) DURING BALANCING.

F. ALL BALANCING CONTROLS WILL BE MARKED ON THE CEILING GRID WITH GREEN DOT WITH NUMBER NEATLY IN BLACK SHARPIE BY TESTING AND BALANCING CONTRACTOR TO IDENTIFY LOCATION.

G. THE EXISTING DUCTWORK, COILS, DIFFUSERS, REGISTERS, AND GRILLES SHALL BE CLEANED AFTER CONSTRUCTION IS COMPLETE AND PRIOR TO OCCUPANCY. A FULL REPORT SHALL BE PROVIDED TO THE OWNER AND ENGINEER FROM THE CONTRACTOR FOR REVIEW.

3.03 PROJECT CLOSE-OUT:

A. RESTORE FACILITIES USED DURING CONSTRUCTION TO ORIGINAL CONDITION. CLEAN PORTIONS OF THE SITE AFFECTED BY WORK OF THIS CONTRACT. REMOVE WASTE AND SURPLUS MATERIALS FROM THE SITE.

B. SUBMIT TWO COPIES OF OPERATION AND MAINTENANCE DATA BOUND IN THREE-RING BINDERS. INCLUDE WARRANTIES, SUBMITTALS, BALANCING REPORT, AND PROJECT DOCUMENTS AND CERTIFICATES. THE MANUAL SHALL ALSO INCLUDE A SCHEDULE FOR EQUIPMENT MAINTENANCE SCHEDULE SHALL PROVIDE A GENERAL OUTLINE FOR EQUIPMENT REQUIREMENT. EXAMPLE; FILTERS SHALL BE CHANGED EVERY 3 MONTHS, TEST DAMPERS ONCE A YEAR, MAINTAIN NEUTRALIZING KIT AT THE AIR HANDLERS.

C. CONTRACTOR SHALL INSTRUCT OWNER IN USE OF SYSTEM.

D. CONTRACTOR SHALL DEMONSTRATE ALL SEQUENCES OF CONTROL TO THE ENGINEER AND LANDLORD. THE TEMPERATURE CONTROL AND BALANCING SUB-CONTRACTORS SHALL ACCOMPANY THE ENGINEER DURING CHECK-OUT PROCEDURE. PERSONNEL SHALL BE EQUIPPED WITH TOOLS AND SPARE PARTS TO MAKE MINOR REPAIRS AND ADJUSTMENTS.

RENOVATIONS TO THE
EXETER TOWN HALL
742 TEN ROD RD, EXETER, RI, 02822

BREWSTER THORNTON GROUP ARCHITECTS LLP
317 Iron Horse Way, Suite 202
Providence, RI 02908
401.861.1600
brewsterthornton.com

Zaino & Associates
183 PROVIDENCE-NEW LONDON TURNPIKE
NORTH STONINGTON, CT 06359

JOB NO. 2605
DATE 08/31/2026
ISSUE : BID DOCUMENTS

NO.	REVISION DESCRIPTION	DATE

SHEET TITLE
MECHANICAL SPECIFICATIONS

SHEET
M400

ABBREVIATIONS

ALL ABBREVIATIONS SHOWN ARE NOT NECESSARILY USED ON THIS PROJECT

A/AMP	AMPERE	KVA	KILOVOLT-AMPERE
AC	ALTERNATING CURRENT	KW	KILOWATT
ADA	AMERICAN WITH DISABILITIES ACT	KWH	KILOWATT HOURS
AF	AMPERE FRAME	LTG	LIGHTING
AFF	ABOVE FINISHED FLOOR	LV	LOW VOLTAGE
AHJ	AUTHORITY HAVING JURISDICTION	MAX	MAXIMUM
AIC	AMPERE INTERRUPTING CAPACITY	MCB	MAIN CIRCUIT BREAKER
AL	ALUMINUM	MIN	MINIMUM
AT	AMPERE TRIP	MLO	MAIN LUG ONLY
ATS	AUTOMATIC TRANSFER SWITCH	MTD	MOUNTED
AWG	AMERICAN WIRE GAUGE	MTG	MOUNTING
AV	AUDIO VISUAL	N	NEUTRAL
C	CONDUIT	NA	NOT APPLICABLE
CA	CABLE	NEC	NATIONAL ELECTRICAL CODE
CAT	CATALOG	NL	NIGHT LIGHT
CATV	CABLE TELEVISION	NIC	NOT IN CONTRACT
CB	CIRCUIT BREAKER	NTS	NOT TO SCALE
CBA	COLOR BY ARCHITECT	OPD	OVER CURRENT PROTECTION DEVICE
CD	CANDELA	P	POLE
CKT	CIRCUITS	PH	PHASE
CU	COPPER	PVC	POLYVINYL CHLORIDE
dB	DECIBEL	PWR	POWER
DC	DIRECT CURRENT	SWBD	SWITCHBOARD
DN	DOWN	TTB	TELEPHONE TERMINAL BOARD
DWG	DRAWING	TEL	TELEPHONE
EC	ELECTRICAL CONTRACTOR	TVSS	TRANSIENT VOLTAGE SURGE SUPPRESSER
ETR	EXISTING TO REMAIN		
F	FAHRENHEIT	TYP	TYPICAL
FA	FIRE ALARM	UG	UNDERGROUND
FACP	FIRE ALARM CONTROL PANEL	UL	UNDERWRITERS LABORATORIES
FBA	FINISH BY ARCHITECT	UPS	UNINTERRUPTIBLE POWER SUPPLY
FLA	FULL LOAD AMPERES	V	VOLTS
G	GROUND	VA	VOLT-AMPERE
GFCI	GROUND FAULT CIRCUIT INTERRUPTER	VFD	VARIABLE FREQUENCY DRIVE
GND	GROUND	VSD	VARIABLE SPEED DRIVE
HP	HORSEPOWER	W	WATTS
HVAC	HEATING, VENTILATION, AND AIR CONDITIONING	WP	WEATHERPROOF
		XFMR/T	TRANSFORMER
IG	ISOLATED GROUND		

CIRCUITING LEGEND

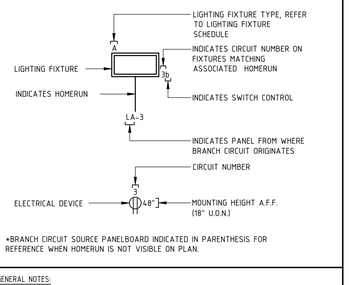

*BRANCH CIRCUIT SOURCE PANELBOARD INDICATED IN PARENTHESIS FOR REFERENCE WHEN HOMERUN IS NOT VISIBLE ON PLAN.

GENERAL NOTES:
1. WIRING AND CONDUIT SHALL BE REQUIRED BETWEEN ALL LIGHTING FIXTURES, RECEPTACLES, OUTLETS, ETC. INDICATED WITH CIRCUIT NUMBERS AND PANEL DESIGNATIONS. REFER TO SPECIFICATIONS FOR APPLICABLE MEANS AND METHODS.
2. ALTHOUGH ALL BRANCH CIRCUIT WIRE AND CONDUIT IS NOT SHOWN, IT IS THE INTENT OF THESE DOCUMENTS THAT A COMPLETE BRANCH CIRCUIT WIRING SYSTEM BE INSTALLED.
3. WIRING SHALL BE 2#12+1#12G IN 3/4"C MINIMUM.

RECEPTACLE BRANCH CIRCUIT WIRING SCHEDULE

CONDUCTOR AWG.	MAXIMUM CONDUCTOR LENGTH AT 120V	GROUND AWG.
#12	100'-0"	#12
#10	165'-0"	#10
#8	255'-0"	#10
#6	405'-0"	#10

RECEPTACLE BRANCH CIRCUIT WIRING SCHEDULE NOTES:
1. BASED ON 20A CIRCUIT LOADED TO 9A USING SINGLE PHASE, 2 WIRE CIRCUITS.
2. THE ABOVE SCHEDULE REPRESENTS MINIMUM CONDUCTOR SIZED BASED FROM PANEL TO CENTER OF LEAD TO OVERCOME VOLTAGE DROP.
3. MAKE PROVISIONS FOR JUNCTION BOX ADJACENT TO OUTLET TO TRANSITION TO #12 WIRE FOR FINAL TERMINATIONS TO DEVICE AS REQUIRED.

LIGHTING BRANCH CIRCUIT WIRING SCHEDULE

CONDUCTOR AWG.	MAXIMUM CONDUCTOR LENGTH AT 120V	MAXIMUM CONDUCTOR LENGTH AT 277V	GROUND AWG.
#12	75'-0"	175'-0"	#12
#10	120'-0"	285'-0"	#10
#8	190'-0"	445'-0"	#10
#6	300'-0"	-	#10

LUMINAIRE BRANCH CIRCUIT WIRING SCHEDULE NOTES:
1. BASED ON 20A CIRCUIT LOADED TO 12A USING SINGLE PHASE, 2 WIRE CIRCUITS.
2. THE ABOVE SCHEDULE REPRESENTS MINIMUM CONDUCTOR SIZE BASED FROM PANEL TO CENTER OF LEAD TO OVERCOME VOLTAGE DROP.
3. MAKE PROVISIONS FOR JUNCTION BOX ADJACENT TO OUTLET TO TRANSITION TO #12 WIRE FOR FINAL TERMINATIONS TO DEVICE AS REQUIRED.

GENERAL NEW WORK NOTES

1. THE ELECTRICAL CONTRACTOR SHALL COORDINATE WITH ALL TRADE DOCUMENTS PRIOR TO SUBMITTING A BID IN ORDER TO GET A COMPLETE UNDERSTANDING OF THE ENTIRE SCOPE OF WORK. ALL WORK FOR OTHER TRADES THAT REQUIRE ELECTRICAL CONNECTIONS, TERMINATIONS, ETC ARE INCLUDED IN THIS SCOPE OF WORK UNLESS OTHERWISE SPECIFIED.
2. WIRING AND CONDUIT OR MC CABLE SHALL BE REQUIRED BETWEEN ALL LIGHT FIXTURES, SWITCHES, SENSORS, POWER PACKS, RELAYS, AND OTHER AUXILIARY DEVICES.
3. PROVIDE A NYLON PULL CORD IN ALL EMPTY CONDUITS.
4. COORDINATE WITH SECURITY VENDOR PLANS FOR EXACT ELECTRICAL REQUIREMENTS FOR SECURITY SYSTEM. PROVIDE ALL ASSOCIATED POWER CONNECTIONS AND EMPTY RACEWAY SYSTEM AND BOXES. PROVIDE PLASTIC END BUSHINGS AND PULL STRINGS IN ALL CONDUITS.
5. COORDINATE WITH A/V VENDOR PLANS FOR EXACT ELECTRICAL REQUIREMENTS FOR A/V SYSTEM. PROVIDE ALL ASSOCIATED POWER CONNECTIONS AND EMPTY RACEWAY SYSTEM AND BOXES. PROVIDE PLASTIC END BUSHINGS AND PULL STRINGS IN ALL CONDUITS.
6. FURNISH LABOR, MATERIALS, EQUIPMENT AND SERVICES NECESSARY FOR THE PROPER AND COMPLETE INSTALLATION OF ALL ELECTRIC WORK SHOWN ON THE DRAWINGS AND HEREIN SPECIFIED.
7. ALL ITEMS NOT SHOWN ON THE DRAWINGS OR CALLED FOR IN THE SPECIFICATIONS, BUT WHICH ARE NECESSARY TO MAKE A COMPLETE ELECTRICAL INSTALLATION, SHALL BE FURNISHED AND INSTALLED AS PART OF THIS PROJECT.
8. ALL ELECTRICAL INSTALLATIONS AND GROUNDING SHALL BE IN STRICT ACCORDANCE WITH THE LATEST REQUIREMENTS OF THE LOCAL, STATE AND NATIONAL CODES.
9. MATERIALS AND WORKMANSHIP SHALL BE THE BEST OF THEIR RESPECTIVE KIND AND IN FULL ACCORDANCE WITH THE MOST MODERN ELECTRICAL CONSTRUCTION STANDARDS. ALL MATERIAL SHALL BE NEW, UNLESS OTHERWISE NOTED AND FREE OF ANY DEFECTS.
10. ALL WORK SEQUENCES SHALL BE COORDINATED WITH THE OWNER, ARCHITECT AND OTHER BUILDING TRADES PRIOR TO THE INITIATION OF ANY WORK.
11. ALL BRANCH CIRCUITS RATED AT 120 VOLTS, 20 AMPERES EXCEEDING 75 FEET SHALL BE MINIMUM #10 AWG.
12. DRAWINGS ARE DIAGRAMMATIC AND INDICATE GENERAL ARRANGEMENT OF SYSTEMS. THE ELECTRICAL CONTRACTOR SHALL COORDINATE WITH INDIVIDUAL ELECTRICAL SYSTEM REPRESENTATIVES IN ORDER TO INCLUDE ALL REQUIRED AUXILIARY EQUIPMENT AND MATERIALS FOR A COMPLETE INSTALLATION.
13. INFORMATION AND COMPONENTS SHOWN ON RISER DIAGRAMS BUT NOT ON PLANS, AND VICE VERSA, SHALL APPLY OR SHALL BE PROVIDED AS THOUGH EXPRESSLY REQUIRED ON BOTH. IT IS NOT INTENDED THAT EVERY JUNCTION BOX, OFFSET, FITTING OR COMPONENT BE SPECIFIED OR SHOWN ON THESE DRAWINGS; HOWEVER, CONTRACT DOCUMENTS REQUIRE PROVISION OF ALL COMPONENTS AND MATERIALS NECESSARY FOR COMPLETE AND OPERATIONAL ELECTRICAL INSTALLATION, WHETHER OR NOT INDICATED OR SPECIFIED.
14. BRANCH CIRCUIT WIRING MAY NOT BE GRAPHICALLY SHOWN ON DRAWINGS AND MAY BE SHOWN BY CIRCUIT NUMBERS BESIDE FIXTURES, DEVICES AND EQUIPMENT. PROVIDE COMPLETE WIRING SYSTEM WHETHER OR NOT SHOWN GRAPHICALLY. WIRING IS SHOWN BY CONDUIT RUNS ON DRAWINGS WHERE SPECIFIC ROUTING IS REQUIRED OR FOR OTHER SPECIAL REASONS. ONLY ROOMS WITH MULTIPLE SWITCHING HAVE "SWITCH CONTROL LETTERS" ASSIGNED. ALL WIRING SHALL BE RUN IN A NEAT AND ORDERLY MANNER.
15. PROVIDE THWN CONDUCTORS IN AREAS WITH HIGH AMBIENT TEMPERATURES SUCH AS BOILER ROOMS, INCINERATOR ROOMS, MECHANICAL EQUIPMENT ROOMS ETC., FOR SIZES LARGER THAN NO. 10 AWG.
16. ALL WIRING, BUSSING, WINDINGS, AND ALL OTHER CONDUCTORS ARE BASED ON THE USE OF COPPER UNLESS OTHERWISE SPECIFIED.
17. ALL WIRING SHALL BE COLOR CODED. WIRING SHALL BE CONCEALED UNLESS OTHERWISE NOTED.
18. PROVIDE CONDUIT SLEEVES AS REQUIRED. THROUGH FIRE RATED SEPARATIONS, FIRE SEAL AFTER WIRING IS COMPLETE.
19. WIRING SHALL NOT BE LAID ON, OR ATTACHED TO THE SUSPENDED CEILING OR ITS SUPPORT WIRES. ALL CABLES SHALL BE RUN PARALLEL OR PERPENDICULAR TO WALLS. DO NOT RUN CABLES DIAGONALLY THROUGH ANY SPACE.
20. WHERE THE NUMBER OF CURRENT CARRYING CONDUCTORS IN A RACEWAY OR CABLE EXCEEDS THREE, THE ALLOWABLE AMPACITY SHALL BE REDUCED PER NATIONAL ELECTRIC CODE TABLE BASED ON NO DIVERSITY. CONSIDER NEUTRALS TO BE CURRENT CARRYING CONDUCTORS.
21. DO NOT COMBINE CIRCUITS OR USE COMMON NEUTRALS.
22. LABEL "BROTHER P-TOUCH LABELING SYSTEM" OR APPROVED EQUAL) OR ENGRAVE EACH RECEPTACLE PLATE WITH PANEL DESIGNATION AND CIRCUIT NUMBER.
23. CONTRACTOR SHALL VISIT THE SITE AND FAMILIARIZE HIMSELF WITH THE EXISTING CONDITIONS. NO CLAIM FOR EXTRA COMPENSATION SHALL BE ENTERTAINED FOR WORK WHICH A PRELIMINARY EXAMINATION WOULD HAVE REVEALED. THE SUBMISSION OF A BID WILL BE CONSIDERED AS ACKNOWLEDGEMENT ON THE PART OF THE BIDDER OF HIS VISITATION TO THE SITE.
24. OBTAIN ALL NECESSARY PERMITS AND CERTIFICATES. PRESENT SATISFACTORY PROOF OF FINAL INSPECTION AND APPROVAL BY AUTHORITIES HAVING JURISDICTION.
25. MAINTAIN CORRECT PHASE SEQUENCE OF ALL FEEDERS AND CIRCUITS BY ESTABLISHING PHASE IDENTIFICATION AND MAINTAINING CORRECT RELATIONSHIP THROUGHOUT THE SYSTEM. PROVIDE LINE BALANCE WITHIN 10% OF NORMAL LOADS.
26. PROVIDE FLUSH, LOCKING, WEATHERPROOF "WHILE IN USE" TYPE RECEPTACLE ENCLOSURE; C.W. COLE # TL310-WCS-SH-GFCI-CC (FINISH SELECTED BY THE ARCHITECT); TYPICAL FOR ALL EXTERIOR RECEPTACLES.
27. PROVIDE TAMPER RESISTANT RECEPTACLES PER NEC ARTICLE 406.12.

MOTOR AND CONTROLS LEGEND

ALL ITEMS SHOWN ARE NOT NECESSARILY USED ON THIS PROJECT

S_{CH} — BOILER EMERGENCY SWITCH. AROW-HART#CS120 WITH MULLBERRY#4020 PLATE.

S_T — SINGLE POLE MOTOR RATED SWITCH WITH OVERLOAD HEATER (MANUAL MOTOR STARTER).

30/3/1 — UN-FUSED DISCONNECT SWITCH WITH RATINGS.
- NEMA RATING. "WP" INDICATES RAINTIGHT
- NUMBER OF POLES
- SWITCH SIZE

30/20/3/DE/1 — FUSED DISCONNECT SWITCH WITH RATINGS.
- NEMA RATING. "WP" INDICATES RAINTIGHT
- INDICATES DUAL ELEMENT FUSES
- FUSE SIZE. "NF" INDICATES NON FUSED
- SWITCH SIZE

XXX/XX — EQUIPMENT TAG. REFER TO PANEL SCHEDULE(S) FOR MORE INFORMATION.

FIRE ALARM LEGEND

ALL ITEMS SHOWN ARE NOT NECESSARILY USED ON THIS PROJECT

FIRE ALARM DEVICES:
ALL FIRE ALARM NOTIFICATION DEVICES SHALL BE MOUNTED AT 80" A.F.F. TO BOTTOM OF STROBE LENS, UNLESS OTHERWISE NOTED. ALL FIRE ALARM PULL STATIONS SHALL BE MOUNTED AT 48" A.F.F. TO CENTER OF DEVICE. REMOTE TEST SWITCHES SHALL BE MOUNTED AT 7'-0" A.F.F. IN CORRIDOR BELOW DUCT SMOKE DETECTOR. THE FOLLOWING DESIGNATIONS SHALL APPLY TO ALL FIRE ALARM DEVICES; UNLESS OTHERWISE NOTED:

C : CEILING MOUNTED.
P : PENDENT.
K : KEY OPERATED TEST SWITCH.
WP : WEATHERPROOF.
WG : WIRE GUARD.
SC : STOPPER COVER.
H : HIGH AUDIBLE SETTING.
L : LOW AUDIBLE SETTING.

SMOKE DETECTION/SENSOR TYPES:

ID : IN DUCT.
S : INDICATES SUPPLY DUCT
R : INDICATES RETURN DUCT
AS : AIR SAMPLING.
I : IONIZATION.
P : PHOTOELECTRIC.
R : RELAY BASE.
E : ELEVATOR RECALL
L : INDICATES LOCAL NOTIFICATION 120V RESIDENTIAL TYPE WITH 9V BATTERY BACKUP

SMOKE DETECTOR - SINGLE STATION, 120V WITH BATTERY BACKUP.

DUCT MOUNTED SMOKE DETECTOR, INSTALLED BY MECHANICAL CONTRACTOR, WIRED AND FURNISHED BY ELECTRICAL CONTRACTOR.

SMOKE DETECTOR/SENSOR WITH LOW FREQUENCY SOUNDER BASE.

BEAM SMOKE DETECTOR RECEIVER.

BEAM SMOKE DETECTOR TRANSMITTER.

HEAT DETECTOR/SENSOR.

HEAT DETECTOR/SENSOR, RATE-OF-RISE "R".

HEAT DETECTOR/SENSOR, FIXED TEMPERATURE "F".

HEAT DETECTOR/SENSOR, COMBINATION RATE-OF-RISE "R" AND FIXED TEMPERATURE "F".

XX — GAS DETECTION TYPES:

CO2 : CARBON DIOXIDE DETECTOR.
CO : CARBON MONOXIDE DETECTOR.
HCL : HYDROGEN CHLORIDE DETECTOR.
CH4 : METHANE DETECTOR.

SMOKE/CARBON MONOXIDE DETECTOR COMBINATION.

SMOKE/HEAT DETECTOR COMBINATION.

SMOKE/CARBON DIOXIDE DETECTOR COMBINATION WITH LOW FREQUENCY SOUNDER BASE

SMOKE/HEAT/CARBON MONOXIDE DETECTOR

15cd — VISIBLE ONLY (STROBE) - CEILING MOUNT
CD=CANDELA RATING/SETTING

15cd — VISIBLE ONLY (STROBE) - WALL MOUNT
CD=CANDELA RATING/SETTING

HORN ONLY

SPEAKER ONLY

15cd — COMBINATION HORN/VISIBLE
CD= CANDELA RATING/SETTING

REMOTE ALARM INDICATOR - CEILING MOUNT

REMOTE ALARM INDICATOR - WALL MOUNT

RTS — REMOTE ALARM INDICATING AND TEST SWITCH

FIRE ALARM BEACON.

INTERMEDIATE RELAY, PROVIDE AS NEEDED.

KEY ACCESS BOX.

FIRE ALARM PULL STATION.

FIRE ALARM SYSTEM MASTERBOX.

FIRE ALARM DRILL KEY.

FACP — FIRE ALARM CONTROL PANEL.

FAA — FIRE ALARM ANNUNCIATOR.

FAGM — FIRE ALARM GRAPHIC MAP.

FAC — FIRE ALARM COMMUNICATOR.

FAAC — FIRE ALARM AS-BUILT CABINET.

FATC — FIRE ALARM TERMINAL CABINET.

RTS — FIRE ALARM KEYED DUCT SMOKE REMOTE TEST STATION.

A — FIRE ALARM RADIO MASTER BOX ANTENNA, MOUNT AT HIGHEST POINT ON BUILDING EXTERIOR.

WF — FIRE ALARM SPRINKLER FLOW SWITCH, BY OTHERS. FURNISHED AND INSTALLED BY THE FIRE PROTECTION CONTRACTOR AND WIRED BY THE ELECTRICAL CONTRACTOR.

PS — FIRE ALARM SPRINKLER PRESSURE SWITCH, BY OTHERS. FURNISHED AND INSTALLED BY THE FIRE PROTECTION CONTRACTOR AND WIRED BY THE ELECTRICAL CONTRACTOR.

TS — FIRE ALARM SPRINKLER TAMPER SWITCH, BY OTHERS. FURNISHED AND INSTALLED BY THE FIRE PROTECTION CONTRACTOR AND WIRED BY THE ELECTRICAL CONTRACTOR.

SHEET LIST

SHEET NUMBER	SHEET NAME
E100	ELECTRICAL LEGENDS AND SYMBOLS
ED200	ELECTRICAL DEMOLITION PLANS
E300	ELECTRICAL LIGHTING PLANS
E301	ELECTRICAL POWER PLANS
E302	ELECTRICAL LIFE SAFETY PLAN
E400	ELECTRICAL FIRE ALARM RISER DIAGRAM
E500	ELECTRICAL RISER DIAGRAM AND DETAILS
E600	ELECTRICAL DETAILS
E700	ELECTRICAL SPECIFICATIONS

POWER OUTLETS & DEVICES LEGEND

ALL ITEMS SHOWN ARE NOT NECESSARILY USED ON THIS PROJECT

POWER RECEPTACLES:
ALL RECEPTACLES SHALL BE MOUNTED A.F.F. 18" TO CENTER, UNLESS OTHERWISE NOTED. THE FOLLOWING DESIGNATIONS SHALL APPLY TO ALL RECEPTACLES TYPES:

C : MOUNTED AT 6" ABOVE BACK SPLASH TO BOTTOM, REFER TO ARCHITECTURAL ELEVATIONS FOR COORDINATION
CLG : CEILING MOUNTED
DW : DISHWASHER
EWC : ELECTRIC WATER COOLER
GD : GARBAGE DISPOSAL
HD : HAND DRYER
IG : ISOLATED GROUND
M : MICROWAVE
T : TAMPER RESISTANT
TL : TWIST LOCK
WP : WEATHERPROOF

SINGLE RECEPTACLE ON NORMAL CIRCUIT.

DUPLEX RECEPTACLE ON NORMAL CIRCUIT.

CEILING MOUNTED DUPLEX RECEPTACLE ON NORMAL CIRCUIT.

DOUBLE DUPLEX RECEPTACLE ON NORMAL CIRCUIT.

DUPLEX GROUND FAULT CIRCUIT INTERRUPTER RECEPTACLE ON NORMAL CIRCUIT.

SHADING SHALL INDICATE AUTOMATIC CONTROLLED RECEPTACLE CONNECTED TO THE SPACE LIGHTING CONTROL SYSTEM OR TIMECLOCK.

XX-XXR — SPECIAL PURPOSE RECEPTACLE WITH NEMA CONFIGURATION TO MATCH EQUIPMENT.

JUNCTION BOX.

USB — DUPLEX RECEPTACLE (TAMPER RESISTANT) W/ (1) USB TYPE A PORT AND (1) USB TYPE C PORT.

USB — DUPLEX RECEPTACLE (TAMPER RESISTANT) W/ (2) USB TYPE A PORTS AND (2) USB TYPE C PORTS.

SURFACE METAL RACEWAY, EQUAL TO WIREMOLD SERIES 3000. PROVIDE WITH RECEPTACLES AS INDICATED ON PLANS WITH ACCESSORIES (ELBOWS, COVERS, COUPLINGS, ETC.) FOR A CONTINUOUS, COMPLETE INSTALLATION. COLOR BY ARCHITECT, IVORY OR GRAY.

SURFACE METAL RACEWAY, EQUAL TO WIREMOLD SERIES 4000. PROVIDE WITH RECEPTACLES AND TECHNOLOGY OUTLETS AS INDICATED ON PLANS WITH ACCESSORIES (ELBOWS, COVERS, COUPLINGS, DIVIDERS, ETC.) FOR A CONTINUOUS, COMPLETE INSTALLATION. COLOR BY ARCHITECT, IVORY OR GRAY.

P P H — POWER FURNITURE FEED.

EMGB — ELECTRICAL MAIN GROUNDING BUSBAR.

SPD — SURGE PROTECTIVE DEVICE.

TV — TELEVISION.

ADA — HANDICAP OPERATOR.

WIFI — WIFI ROUTER. COORDINATE POWER REQUIREMENTS WITH MANUFACTURER.

LIGHTING FIXTURE LEGEND

ALL ITEMS SHOWN ARE NOT NECESSARILY USED ON THIS PROJECT

A/a — LIGHT FIXTURE (LUMINAIRE) ON NORMAL CIRCUIT. LETTER INDICATES TYPE. SUBSCRIPT INDICATES CONTROL AND CIRCUIT NUMBER.

AE/a — LIGHT FIXTURE (LUMINAIRE) TO BE PROVIDED WITH INTEGRAL BATTERY BACKUP. LETTER INDICATES TYPE. SUBSCRIPT INDICATES CONTROL AND CIRCUIT NUMBER.

X — EXIT SIGN, ONE OR TWO FACED. ARROWS DENOTE DIRECTION. SHADING DENOTES NUMBER AND ORIENTATION OF SIGN FACE(S).

X1 — EXIT SIGN WITH EMERGENCY LIGHTS. ARROWS DENOTE DIRECTION. SHADING DENOTES NUMBER AND ORIENTATION OF SIGN FACE(S).

EB — EMERGENCY LIGHTING BATTERY UNIT WITH EMERGENCY LIGHTS FIXTURE SHALL BE EQUAL TO ELITE LIGHTING MODEL # ELM-LED-804-(FINISH).

EBU — EMERGENCY LIGHTING BATTERY UNIT WITH EMERGENCY LIGHTS AND REMOTE CAPACITY. FIXTURE SHALL BE EQUAL TO ELITE LIGHTING MODEL # ELX-LED-818-(FINISH).

RH — REMOTE EMERGENCY HEAD

INV — INVERTER

AUDIO/VISUAL LEGEND

ALL ITEMS SHOWN ARE NOT NECESSARILY USED ON THIS PROJECT

AUDIO/VISUAL OUTLETS:
COORDINATE ALL LOCATIONS AND MOUNTING HEIGHTS WITH OWNERS AND TELECOMMUNICATIONS VENDOR PRIOR TO ROUGH-IN; MOUNT VERTICAL OUTLETS AT 18"A.F.F. TO CENTER UNLESS OTHERWISE DIRECTED. SCOPE INCLUDES INSTALLTION OF BACK BOX AND CONDUIT TO DEMARK LOCATION. WIRING AND TERMINATIONS BY OTHERS. THE DESIGNATIONS SHALL APPLY TO ALL OUTLET TYPES:

C = INDICATES MOUNTED AT 6" ABOVE BACK SPLASH TO BOTTOM, REFER TO ARCHITECTURAL ELEVATIONS.
F = INDICATES FLOOR MOUNTED.
P = INDICATES MOUNTED AT 47" A.F.F.
W = INDICATES MOUNTED AT 54" A.F.F.
H = INDICATES MOUNTED AT 82" A.F.F.

DO — DISPLAY OUTLET BOX; REFER TO DISPLAY OUTLET DEVICE SCHEDULE FOR ADDITIONAL INFORMATION.

AO AO — AUDIO VISUAL OUTLET. NUMBER INDICATES DESIGNATED OUTLET DETAIL. REFER TO TELECOMMUNICATIONS CONDUIT DETAIL FOR ADDITIONAL INFORMATION.

S S — SPEAKER, CEILING OR WALL MOUNTED

V — VOLUME CONTROL SWITCH

M M — MICROPHONE OUTLET, WALL OR FLOOR MOUNTED

AMP — SOUND SYSTEM AMPLIFIER

C — CAMERA. COORDINATE WITH OWNER AND SECURITY VENDOR FOR INSTALLATION.

LIGHTING CONTROL LEGEND

ALL ITEMS SHOWN ARE NOT NECESSARILY USED ON THIS PROJECT

S_a — SINGLE POLE SWITCH. SUBSCRIPT INDICATES LIGHT FIXTURE CONTROL.

S^P_a — SINGLE POLE SWITCH WITH PILOT LIGHT. SUBSCRIPT INDICATES LIGHT FIXTURE CONTROL.

S_{2a} — TWO POLE SWITCH. SUBSCRIPT INDICATES LIGHT FIXTURE CONTROL.

S_{3a} — THREE WAY SWITCH. SUBSCRIPT INDICATES LIGHT FIXTURE CONTROL.

S_{4a} — FOUR WAY SWITCH. SUBSCRIPT INDICATES LIGHT FIXTURE CONTROL.

S^K_a — KEYED SINGLE POLE SWITCH. SUBSCRIPT INDICATES LIGHT FIXTURE CONTROL.

S^K_{3a} — KEYED THREE WAY SWITCH. SUBSCRIPT INDICATES LIGHT FIXTURE CONTROL.

S^K_{4a} — KEYED FOUR WAY SWITCH. SUBSCRIPT INDICATES LIGHT FIXTURE CONTROL.

S_{L1a} — LUTRON #PJ2-2B-GWH-L01 PICO KEYPAD 2 BUTTON WITH LIGHT ICON-PICO KEYPAD WITH CW-1-WH.

S_{L1Da} — LUTRON PJ2-2BRL-GWH-L01 PICO KEYPAD 2 BUTTON WITH RAISE/LOWER AND LIGHT ICON- PICO KEYPAD.

S_{L3a} — LUTRON #PJ2-3B-GWH-L01 PICO KEYPAD 3 BUTTON WITH LIGHT ICON-PICO KEYPAD.

$S_{L3Rabcd}$ — LUTRON #PJ2-3BRL-GWH-L01 PICO KEYPAD 3 BUTTON WITH RAISE/LOWER AND LIGHT ICON- PICO KEYPAD.

S^{abcd}_{Lref} — LUTRON #PJ2-4B-GWH-L31 PICO KEYPAD 4 BUTTON SCENE WITH LIGHT ICON- PICO KEYPAD.

S^{abcd}_{Lefgh} — EIGHT BUTTON LOW VOLTAGE DIGITAL SWITCH, EQUAL TO WATT STOPPER #LMSW-108, MOUNTED AT 48" A.F.F TO CENTER. SUBSCRIPT INDICATES LIGHT FIXTURE CONTROL.

S_{TCa} — 120V ASTRONOMICAL TIME SWITCH WITH OLED DISPLAY, EQUAL TO WATTSTOPPER #RT-200,MOUNTED AT 48" A.F.F TO CENTER. SUBSCRIPT INDICATES LIGHT FIXTURE CONTROL.

S_{WDa} — MAESTRO WIRELESS DIMMER;120-277V, 8 A, 0-10 V, OCCUPANCY/VACANCY SINGLE POLE DIMMER SENSOR #MRF5-8SDD10-WH.

S_{WSa} — MAESTRO WIRELESS DIMMER;120-277V, 8 A, 0-10 V, OCCUPANCY/VACANCY SINGLE POLE SWITCH SENSOR #MRF5-8SS-WH WALL MOUNTED AT 48" A.F.F.

HUB — LUTRON #HJ2-H-FM PREMIUM VIVE HUB, FLUSH-MOUNT ADAPTER, AND POWER SUPPLY.

ELC a — POWPAK DIMMING MODULE WITH 0-10 V CONTROL. EQUAL TO LUTRON #RMJS-8T-DV-B

ELC ab — POWPAK RELAY MODULE THAT CAN CONTROL 20 A RECEPTACLES. EQUAL TO LUTRON #RMJS-20R-DV-B.

ELC abc — VIVE POWPAK PHASE SELECT DIMMING MODULE 120V/277V. MOUNTS IN STD 4X4 BO. EQUAL TO LUTRON #RMJS-PNE-DV

OS — CEILING MOUNTED RADIO POWR SAVR WIRELESS CEILING MOUNT DAYLIGHT SENSOR. EQUAL TO LUTRON #LRF2-OCRB-WH

OS a — LUTRON CEILING MOUNTED RADIO POWR SAVR WIRELESS CEILING MOUNT OCCUPANCY SENSOR, EQUAL TO LRF2-OCR2B-P-WH

OS ab — WALL/CORNER MOUNTED RADIO POWR SAVR WIRELESS OCCUPANCY SENSOR. EQUAL TO LUTRON #LRF2-OWLB-P-WH

PC — PHOTOCELL

ELC — EMERGENCY LIGHTING CONTROL, PROVIDE A WATTSTOPPER #ELCU-100, OR APPROVED EQUAL.

FAI — FIRE ALARM INTERFACE. EQUAL TO LUTRON #LUT-ELI-3PH

TELECOMMUNICATION LEGEND

ALL ITEMS SHOWN ARE NOT NECESSARILY USED ON THIS PROJECT

TELECOMMUNICATION OUTLETS:
COORDINATE ALL LOCATIONS AND MOUNTING HEIGHTS WITH OWNERS AND TELECOMMUNICATIONS VENDOR PRIOR TO ROUGH-IN; MOUNT VERTICAL OUTLETS AT 18"A.F.F. TO CENTER UNLESS OTHERWISE DIRECTED. E.C. SHALL PROVIDE A DOUBLE GANG BACK BOX WITH SINGLE GANG REDUCER, 1" CONDUIT AND PULLSTRING STUBBED OUT ABOVE ACCESSIBLE CEILING AT ALL LOCATIONS. SCOPE INCLUDES INSTALLTION OF BACK BOX AND CONDUIT TO DEMARK LOCATION. WIRING AND TERMINATIONS BY OTHERS. THE DESIGNATIONS SHALL APPLY TO ALL OUTLET TYPES:

C = INDICATES MOUNTED AT 6" ABOVE BACK SPLASH TO BOTTOM,REFER TO ARCHITECTURAL ELEVATIONS.
F = INDICATES FLOOR MOUNTED.

COMBINATION TELECOMMUNICATIONS/DATA OUTLET.

TELECOMMUNICATIONS OUTLET.

WIRELESS ACCESS POINT. CEILING OR WALL MOUNTED.

D D — TELECOMMUNICATIONS FURNITURE FEED.

CR — CARD READER. COORDINATE CUSTOM BACKBOX WITH SECURITY VENDOR.

DC — DOOR CONTACT. COORDINATE CUSTOM BACKBOX WITH SECURITY VENDOR.

KP — KEYPAD. COORDINATE CUSTOM BACKBOX WITH SECURITY VENDOR.

POWER DISTRIBUTION LEGEND

ALL ITEMS SHOWN ARE NOT NECESSARILY USED ON THIS PROJECT

480Y/277 VOLT PANELBOARD, SURFACE MOUNTED, REFER TO SCHEDULE OF PANELBOARDS.

480Y/277 VOLT PANELBOARD, FLUSH MOUNTED, REFER TO SCHEDULE OF PANELBOARDS.

208Y/120 VOLT PANELBOARD, SURFACE MOUNTED, REFER TO SCHEDULE OF PANELBOARDS.

208Y/120 VOLT PANELBOARD, FLUSH MOUNTED, REFER TO SCHEDULE OF PANELBOARDS.

M — METER SOCKET AND UTILITY COMPANY ELECTRIC METER, OR AS NOTED.

ENCLOSED CIRCUIT BREAKER.

T — TRANSFORMER

RENOVATIONS TO THE
EXETER TOWN HALL
742 TEN ROD RD, EXETER, RI, 02822

BREWSTER THORNTON GROUP ARCHITECTS LLP
317 Iron Horse Way, Suite 202
Providence, RI 02908
401.861.1600
brewsterthornton.com

ZAINO & ASSOCIATES
Zaino & Associates
183 PROVIDENCE-NEW LONDON TURNPIKE
NORTH STONINGTON, CT 06359

JOB NO. 2605 | DATE 08/31/2026

ISSUE : BID DOCUMENTS

NO.	REVISION DESCRIPTION	DATE

SHEET TITLE
ELECTRICAL LEGEND AND SYMBOLS

SHEET
E100

GENERAL DEMOLITION NOTES

1. PRIOR TO SUBMITTING BID, VISIT SITE AND IDENTIFY EXISTING CONDITIONS AND DIFFICULTIES THAT WILL AFFECT WORK OF THIS SECTION. RENOVATION WORK WILL REQUIRE CAREFUL SITE EXAMINATION PRIOR TO BIDDING. NO COMPENSATION WILL BE GRANTED FOR ADDITIONAL WORK CAUSED BY UNFAMILIARITY WITH SITE CONDITIONS THAT ARE VISIBLE OR READILY CONSTRUED BY AN EXPERIENCED OBSERVER. FIELD VERIFY MEASUREMENTS AND CIRCUITING ARRANGEMENTS THAT ARE AS SHOWN ON DRAWINGS.
2. FIELD VERIFY THAT ABANDONED WIRING AND EQUIPMENT SERVE ONLY ABANDONED FACILITIES.
3. DEMOLITION DRAWINGS ARE BASED ON CASUAL FIELD OBSERVATION AND EXISTING RECORD DOCUMENTS. REPORT DISCREPANCIES TO ARCHITECT/ENGINEER BEFORE DISTURBING EXISTING INSTALLATIONS. THESE DRAWINGS HAVE BEEN COMPILED FROM THE BEST AVAILABLE INFORMATION AND ARE NOT INTENDED TO LIMIT THE SCOPE OF THE WORK. THE ELECTRICAL CONTRACTOR MAY ENCOUNTER HIDDEN OR COVERED CONDITIONS, NOT INDICATED IN THESE DOCUMENTS, REQUIRING THE ELECTRICAL CONTRACTOR TO PROVIDE ADDITIONAL WORK FOR THE COMPLETION OF HIS OR HER CONTRACT. IT WILL BE ASSUMED THAT THE CONTRACTOR HAS INSPECTED THE SITE PRIOR TO BIDDING AND VERIFIED THE INFORMATION SUPPLIED HEREIN AND ADDITIONAL WORK REQUIRED. BEGINNING OF DEMOLITION MEANS THE CONTRACTOR ACCEPTS EXISTING CONDITIONS. REFER TO ALL CONSTRUCTION DOCUMENTS TO GAIN A COMPLETE UNDERSTANDING OF THE DEMOLITION WORK REQUIRED.
4. CUT, REMOVE AND LEGALLY DISPOSE OF SELECTED ELECTRICAL EQUIPMENT, COMPONENTS AND MATERIALS AS INDICATED, INCLUDING, BUT NOT LIMITED TO, REMOVAL OF ELECTRICAL ITEMS INDICATED TO BE REMOVED AND ITEMS MADE OBSOLETE BY THE WORK. DISCONNECT AND REMOVE ALL FIXTURES, WIRING DEVICES, CONDUIT AND FITTINGS, WIRING AND CABLE, FIRE ALARM DEVICES/COMPONENTS, HANGERS, SUPPORTS, WIREWAYS, AND ALL OTHER ELECTRICAL COMPONENTS MADE OBSOLETE BY THIS PROJECT. THE OWNER RESERVES THE OPTION OF SALVAGE RIGHTS TO DEMOLISHED MATERIAL AND REMOVED EQUIPMENT. THE CONTRACTOR SHALL COORDINATE WITH THE OWNER'S REPRESENTATIVE TO OBTAIN A LIST OF MATERIALS AND REMOVED EQUIPMENT TO BE TURNED OVER TO THE OWNER. ALL OTHER MATERIAL AND REMOVED EQUIPMENT NOT BEING SALVAGED BY THE OWNER SHALL BE DISPOSED OF BY THE CONTRACTOR. PLACE ALL DEMOLISHED ELECTRICAL MATERIALS EXCEPT HAZARDOUS MATERIALS (PCB LIGHTING BALLASTS, FLUORESCENT LAMPS, ETC.) AS DETERMINED BY THE AUTHORITY HAVING JURISDICTION IN GENERAL CONTRACTOR'S DUMPSTER. ALL HAZARDOUS ELECTRICAL MATERIALS SHALL BE LEGALLY DISPOSED OF BY THE ELECTRICAL SUBCONTRACTOR.
5. DISCONNECT ELECTRICAL SYSTEMS IN WALLS, FLOORS, AND CEILINGS SCHEDULED FOR REMOVAL.
6. MAINTAIN ACCESS TO EXISTING ELECTRICAL INSTALLATIONS WHICH REMAIN ACTIVE. MODIFY INSTALLATION OR PROVIDE ACCESS PANELS AS APPROPRIATE. TEMPORARY WALL OPENINGS AND/OR MODIFICATIONS REQUIRED FOR REMOVAL/INSTALLATION OF EQUIPMENT SHALL BE PROVIDED AS NEEDED AND COORDINATED WITH THE GENERAL CONTRACTOR. ALL HVAC, PLUMBING AND FIRE PROTECTION EQUIPMENT SCHEDULED TO BE REMOVED OR RELOCATED SHALL BE DONE SO BY THE HVAC AND PLUMBING CONTRACTOR RESPECTIVELY. THE ELECTRICAL CONTRACTOR SHALL REMOVE STARTERS, DISCONNECT SWITCHES, WIRING, AND CONDUIT FOR SAID EQUIPMENT. REFER TO HVAC AND PLUMBING DRAWINGS FOR SCOPE OF WORK.
7. PROVIDE TEMPORARY WIRING AND CONNECTIONS TO MAINTAIN EXISTING SYSTEMS IN SERVICE DURING CONSTRUCTION. WHEN WORK MUST BE PERFORMED ON ENERGIZED EQUIPMENT OR CIRCUITS USE PERSONNEL EXPERIENCED IN SUCH OPERATIONS.
8. EXISTING FIRE ALARM SYSTEM: MAINTAIN THE EXISTING SYSTEM IN SERVICE UNTIL THE MODIFIED/EXPANDED SYSTEM IS TESTED AND ACCEPTED BY THE FIRE DEPARTMENT. DISABLE SYSTEM ONLY TO MAKE SWITCHOVERS AND CONNECTIONS. NOTIFY OWNER, ARCHITECT/ENGINEER AND LOCAL FIRE DEPARTMENT AT LEAST TEN DAYS BEFORE PARTIALLY OR COMPLETELY DISABLING SYSTEM. MINIMIZE OUTAGE DURATION. MAKE TEMPORARY CONNECTIONS TO MAINTAIN SERVICE IN AREAS ADJACENT TO WORK AREA AS REQUIRED OR PROVIDE A "FIRE-WATCH" SYSTEM COORDINATED WITH THE LOCAL FIRE DEPARTMENT.
9. EXTEND EXISTING ELECTRICAL INSTALLATIONS AS CALLED FOR ON THE DRAWINGS.
10. REMOVE, RELOCATE, AND EXTEND EXISTING INSTALLATIONS TO ACCOMMODATE NEW CONSTRUCTION.
11. REMOVE ABANDONED WIRING TO SOURCE OF SUPPLY.
12. REMOVE EXPOSED ABANDONED CONDUIT, INCLUDING ABANDONED CONDUIT ABOVE ACCESSIBLE CEILING FINISHES. CUT CONDUIT FLUSH WITH WALLS AND FLOORS, AND PATCH SURFACES.
13. DISCONNECT ABANDONED OUTLETS AND REMOVE DEVICES. REMOVE ABANDONED OUTLETS IF CONDUIT SERVICING THEM IS ABANDONED AND REMOVED. PROVIDE BLANK COVER FOR ABANDONED OUTLETS WHICH ARE NOT REMOVED.
14. DISCONNECT AND REMOVE ELECTRICAL DEVICES AND EQUIPMENT SERVING UTILIZATION EQUIPMENT THAT HAS BEEN REMOVED.
15. DISCONNECT AND REMOVE ABANDONED LIGHTING FIXTURES. REMOVE BRACKETS, STEMS, HANGERS, AND OTHER ACCESSORIES.
16. DISCONNECT AND REMOVE OTHER SYSTEMS AND EQUIPMENT WITHIN THE WORK AREA MADE OBSOLETE BY THIS WORK.
17. PROTECT ALL EXISTING WALLS, FLOORS, CEILINGS, LIGHT FIXTURES, ETC. WHICH ARE TO REMAIN AND TO PREVENT DAMAGE DURING ALL CONSTRUCTION PHASES. REPAIR ADJACENT CONSTRUCTION AND FINISHES DAMAGED DURING DEMOLITION AND EXTENSION WORK. PROVIDE AND MAINTAIN TEMPORARY PARTITIONS OR DUST BARRIERS ADEQUATE TO PREVENT THE SPREAD OF DUST AND DIRT TO ADJACENT AREAS. PROTECT THE STRUCTURE, FURNISHINGS, FINISHES, AND ADJACENT MATERIALS NOT INDICATED OR SCHEDULED TO BE REMOVED. PROTECT THE ELECTRICAL WORK AND THE WORK OF OTHERS IN A MANNER BEST SUITED TO THE PARTICULAR CASE. CORRECT ANY DAMAGE DONE TO ANY WORK AT NO ADDITIONAL COST.
18. EXTEND EXISTING INSTALLATIONS USING MATERIALS AND METHODS COMPATIBLE WITH EXISTING ELECTRICAL INSTALLATIONS, OR AS SPECIFIED.
19. CLEAN AND REPAIR EXISTING MATERIALS AND EQUIPMENT WHICH REMAIN OR ARE TO BE REUSED.
20. PANELBOARDS: CLEAN EXPOSED SURFACES AND CHECK TIGHTNESS OF ELECTRICAL CONNECTIONS. REPLACE DAMAGED CIRCUIT BREAKERS AND PROVIDE CLOSURE PLATES FOR VACANT POSITIONS. PROVIDE TYPED CIRCUIT DIRECTORY SHOWING REVISED CIRCUITING ARRANGEMENT.
21. LIGHTING FIXTURES: EXISTING LIGHTING FIXTURES SCHEDULED FOR REUSE SHALL BE REMOVED FOR CLEANING. USE MILD DETERGENT TO CLEAN ALL EXTERIOR AND INTERIOR SURFACES; RINSE WITH CLEAN WATER AND WIPE DRY. REPLACE LAMPS, BALLASTS AND BROKEN ELECTRICAL PARTS.
22. EXISTING ELECTRICAL EQUIPMENT AND WIRING NOT SHOWN ON DOCUMENTS OR ADDRESSED BY NOTES ABOVE SHALL BE CONSIDERED EXISTING TO REMAIN.
23. LOW VOLTAGE CONTRACTOR TO REMOVE ALL ABANDONED LOW VOLTAGE WIRING. COORDINATE EXACT LOCATIONS IN FIELD.

KEYED SHEET NOTES

1. ALL RECEPTACLES, LOW-VOLTAGE RECEPTACLES AND FIRE ALARM DEVICES REPRESENTED ARE FOR REFERENCE AND AREA OF DEMOLITION SHALL BE INSPECTED BY E.C. TO DETERMINE LOCATION OF OTHER EXISTING ELECTRICAL COMPONENTS.
2. REMOVE AND PROTECT EXISTING CAMERAS FOR REINSTALLATION AS NEEDED.
3. REMOVAL OF WATER HEATER SHALL BE COORDINATED WITH OTHER TRADES.
4. EXISTING TERMINATION POINT FOR IT WIRING. COORDINATE NEW LOCATION WITH OWNER.
5. EXISTING 4 (FOUR) WAY LIGHT SWITCH SHALL BE RELOCATED. SEE LIGHTING PLAN FOR ADDITIONAL INFORMATION.
6. EXISTING LIGHT SWITCHES LOCATED IN DEMOLITION AREA SHALL BE RELOCATED. SEE LIGHTING PLAN FOR ADDITIONAL INFORMATION.

KEYED SHEET NOTES

7. ALL SPEAKERS ARE EXISTING TO REMAIN. E.C. SHALL COORDINATE WITH OWNER REGARDING RELOCATION/REMOVAL OF SPEAKERS.
8. EXISTING KEYPAD HARDWARE ON DOOR 105B AND DOOR 116 SHALL BE REMOVED AND REPLACED WITH CARD READERS. COORDINATE WITH OWNER AND E.C.
9. ALL WIRING AND A/V CONNECTIONS SHALL BE REMOVED.

EXISTING RECEPTACLES, LOW-VOLTAGE RECEPTACLES, BLANK PLATES, AND FIRE ALARM DEVICES IN THIS AREA SHALL BE REMOVED AND ALL ASSOCIATED WIRING PULLED BACK TO SOURCE. E.C. SHALL VISIT THE SITE TO DETERMINE QUANTITY OF FIXTURES TO BE REMOVED PRIOR TO SUBMISSION OF BID.

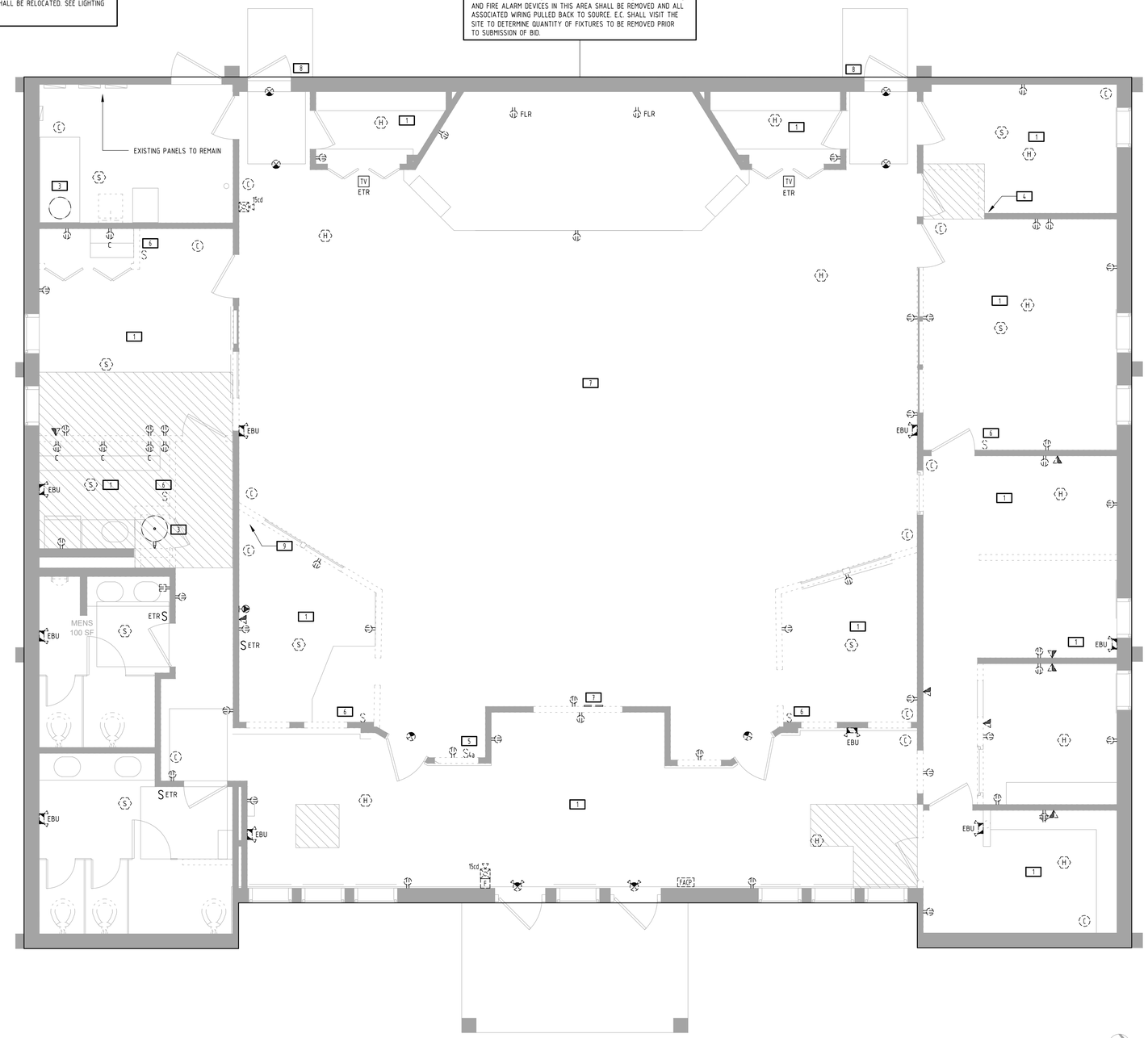

1 ELECTRICAL - DEMOLITION PLAN
SCALE: 1/4" = 1'-0"

0 4'-0" 8'-0" 12'-0"

RENOVATIONS TO THE
EXETER TOWN HALL
742 TEN ROD RD, EXETER, RI, 02822

BREWSTER THORNTON GROUP ARCHITECTS LLP
317 Iron Horse Way, Suite 202
Providence, RI 02908
401.861.1600
brewsterthornton.com

ZAINO & ASSOCIATES
Zaino & Associates
183 PROVIDENCE-NEW LONDON TURNPIKE
NORTH STONINGTON, CT 06359

JOB NO.	DATE
2605	08/31/2026

ISSUE : **BID DOCUMENTS**

NO.	REVISION DESCRIPTION	DATE

SHEET TITLE
ELECTRICAL DEMO PLAN

SHEET
ED200

LIGHTING PLAN SHEET NOTES

1. LOCATIONS OF ALL SWITCHES SHALL COMPLY WITH ADA CRITERIA.
2. ALL BRANCH CIRCUIT CONDUCTORS SHALL BE 98% CONDUCTIVITY, COPPER MINIMUM #12 AWG SIZE, THWN/THHN INSULATION, 600 VOLTS RATED UNLESS OTHERWISE NOTED.
3. EXACT LOCATIONS OF ALL FIXTURES AND DEVICES SHALL BE FULLY COORDINATED WITH ARCHITECTURAL PLANS, ELEVATIONS, SECTIONS, AND THE WORK OF OTHER TRADES PRIOR TO ROUGH-IN.
4. REFER TO ARCHITECTURAL DRAWINGS FOR FIRE AND SMOKE RATED WALLS AND PROVIDE POWER METHODS OF PENETRATION FOR EACH.
5. LIGHT FIXTURES AND WIRING LOCATED IN AIR-HANDLING AREAS SHALL BE PLENUM RATED.
6. VERIFY ALL CEILING TYPES AND MATERIALS BEFORE ORDERING ANY LIGHT FIXTURES.
7. SUPPORT EACH LIGHT FIXTURE INDEPENDENTLY OF THE SUSPENDED CEILING SYSTEM AND COORDINATE LOCATIONS WITH REFLECTED CEILING PLAN AND OTHER TRADES TO AVOID CONFLICT.

KEYED SHEET NOTES

1. LIGHT FIXTURES ARE TO BE RELOCATED FROM DEMO LOCATION TO CURRENT LOCATION. COORDINATE WITH E.C. FOR REMOVAL AND RELOCATION. ALL FIXTURES NOT TAGGED ARE EXISTING TO REMAIN.
2. COORDINATE EXACT LOCATION OF LIGHT SWITCHES IN FIELD WITH OWNER/ARCHITECT PRIOR TO ROUGH-IN.
3. ALL SPEAKERS AND SENSORS ARE EXISTING TO REMAIN. COORDINATE WITH ENGINEER AND E.C. IF RELOCATION IS REQUIRED. (TYPICAL FOR ALL)
4. LIGHT FIXTURE SHALL BE TIED INTO EXISTING LIGHTING PLAN. REFER TO E.C. FOR TIE IN PROCESS.
5. PROVIDE NEW DIMMING WALL SWITCH AND OCCUPANCY SENSOR FOR NEW LIGHT FIXTURE TO BE INSTALLED.
6. COORDINATE EXACT LOCATION OF 4 (FOUR) WAY LIGHT SWITCH IN FIELD WITH OWNER/ARCHITECT PRIOR TO ROUGH IN. PREVIOUS LIGHT FIXTURE CONNECTIONS TO THIS SWITCH SHALL REMAIN.

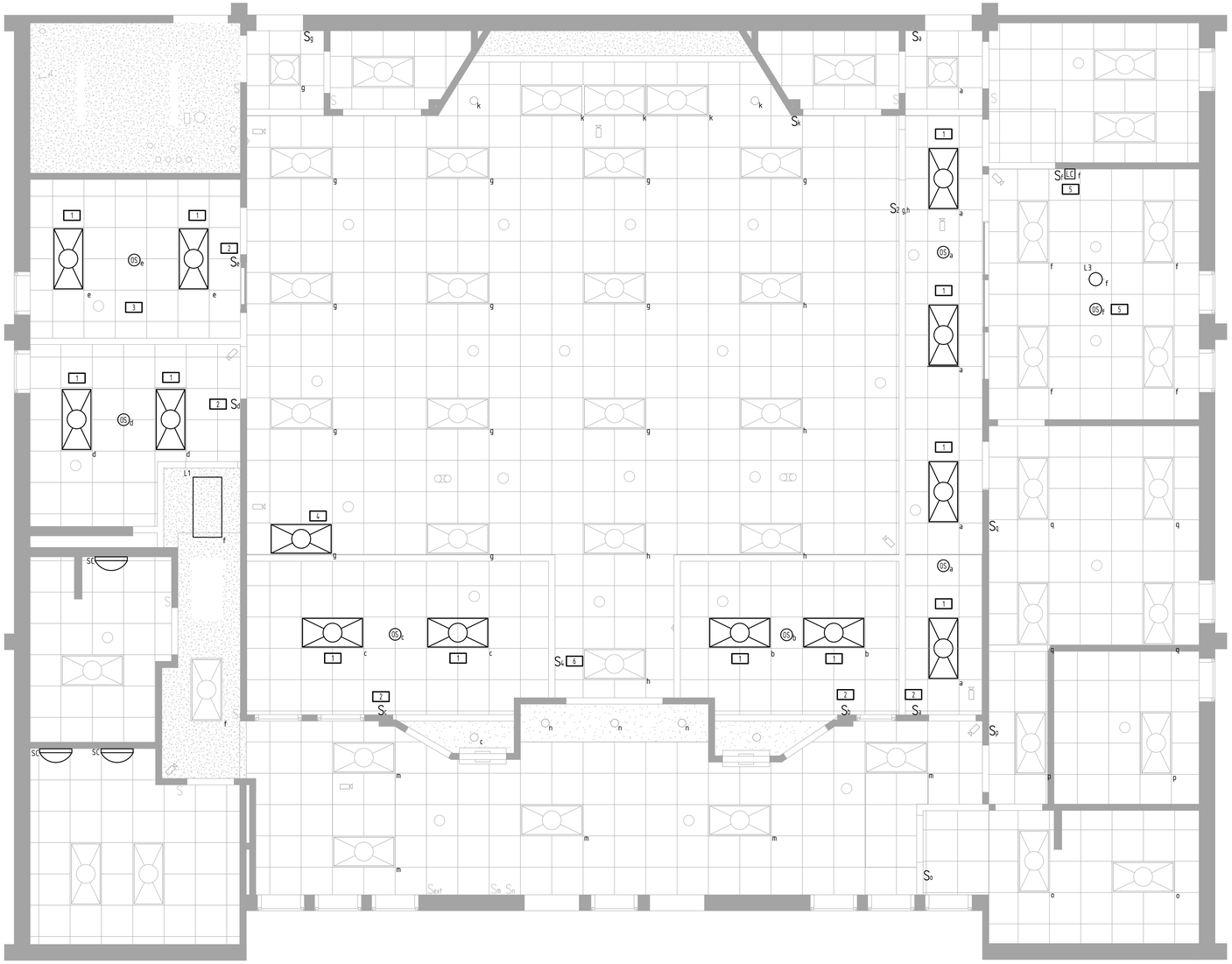

1 ELECTRICAL - LIGHTING PLAN
SCALE: 1/4" = 1'-0"
0 4'-0" 8'-0" 12'-0"

RENOVATIONS TO THE EXETER TOWN HALL

742 TEN ROD RD, EXETER, RI, 02822

BREWSTER THORNTON GROUP ARCHITECTS LLP
317 Iron Horse Way,
Suite 202
Providence, RI 02908

401.861.1600
brewsterthornton.com

ZAINO & ASSOCIATES
Zaino & Associates
183 PROVIDENCE-NEW LONDON TURNPIKE
NORTH STONINGTON, CT 06359

JOB NO.	DATE
2605	08/31/2026

ISSUE : BID DOCUMENTS

NO.	REVISION DESCRIPTION	DATE

SHEET TITLE

ELECTRICAL LIGHTING PLAN

SHEET

E300

MECHANICAL CONNECTION SCHEDULE TAG

XXX / XX — REFER TO "ELECTRICAL CONNECTION SCHEDULE FOR MECHANICAL EQUIPMENT" IN THIS DRAWING SET FOR ALL CIRCUIT INFORMATION, INCLUDING BUT NOT LIMITED TO BRANCH CIRCUIT WIRING AND CONDUIT SIZE, VOLTAGE, PHASE, MOTOR CONTROL, DISCONNECT SWITCH AND CIRCUIT BREAKER. REFER TO MECHANICAL, PLUMBING, AND FIRE PROTECTION PLANS FOR EXACT EQUIPMENT LOCATIONS.

POWER PLAN NOTES

1. EXACT LOCATIONS OF ALL FIXTURES, DEVICES, AND EQUIPMENT SHALL BE FULLY COORDINATED WITH ARCHITECTURAL PLANS, ELEVATIONS, SECTIONS, AND THE WORK OF OTHER TRADES PRIOR TO ROUGH-IN.
2. TEL/DATA RECEPTACLES INDICATED ON THIS PLAN SHALL INCLUDE THE INSTALLATION OF WALL TERMINATION (WITH EXACT CONFIGURATION TO BE DETERMINED BY OWNER) WITH CONDUIT AND PULL STRING TO ABOVE CEILING LOCATION.
3. ALL BRANCH CIRCUIT CONDUCTORS SHALL BE 98% CONDUCTIVITY, COPPER MINIMUM #12 AWG SIZE, THWN/THHN INSULATION, 600 VOLTS RATED UNLESS OTHERWISE NOTED.
4. REFER TO ARCHITECTURAL DRAWINGS FOR FIRE AND SMOKE RATED WALLS AND PROVIDE POWER METHODS OF PENETRATION FOR EACH.
5. ALTHOUGH ALL BRANCH CIRCUIT WIRE AND CONDUIT IS NOT SHOWN, IT IS THE INTENT OF THESE DOCUMENTS THAT A COMPLETE BRANCH CIRCUIT WIRING SYSTEM BE INSTALLED.
6. THE LOCATIONS OF HVAC EQUIPMENT SHOWN ON THESE DRAWINGS ARE APPROXIMATE. FOR EXACT LOCATIONS REFER TO HVAC DRAWINGS AND SHOP DRAWINGS.
7. HVAC EQUIPMENT RATED FOR 230V SHALL BE PROVIDED WITH AN APPROPRIATELY SIZED BUCK-BOOST TRANSFORMER.
8. LOW VOLTAGE CONTRACTOR SHALL VERIFY ALL LOCATIONS OF LOW VOLTAGE EQUIPMENT WITH ARCHITECT IN FIELD PRIOR TO ROUGH-IN.

KEYED SHEET NOTES

1. PROVIDE FLOOR BOX WITH POWER AND EMPTY CONDUITS FOR DATA/AV HOOKUPS. COORDINATE TRENCHING REQUIREMENTS AND ROUTING IN THE FIELD.
2. COORDINATE LOCATION OF NEW CAMERAS WITH OWNER. E.C. SHALL PROVIDE JUNCTION BOXES FOR ALL CAMERAS - COORDINATE WITH ENGINEER FOR CLARIFICATION IF NEEDED.
3. HALF SHADED RECEPTACLES INDICATED PLUG-LOAD CONTROLLED RECEPTACLES. PROVIDE OCCUPANCY SENSOR FOR AUTOMATED OPERATIONS. (TYPICAL FOR ALL)
4. RECEPTACLE AND DATA PORT SHALL BE USED FOR TELEVISION. COORDINATE EXACT LOCATION IN FIELD WITH OWNER AND ARCHITECT BASED ON TELEVISION MOUNTING HEIGHT.
5. RECEPTACLE AND DATA PORT SHALL BE INSTALLED INSIDE THE CABINET FOR CONCEALMENT PURPOSES. COORDINATE WIRING BETWEEN PORTS AND TELEVISION WITH OWNER AND ARCHITECT IN FIELD.
6. RELOCATE EXISTING IT CABLES AND ROUTE ALL NEW IT CABLES TO NEW IT ROOM.
7. COORDINATE EXACT LOCATION OF ACCESS CONTROL SYSTEM EQUIPMENT WITH OWNER. E.C. SHALL PULL 18/4 WIRING TO A BACKBOX AT DETERMINED LOCATIONS AS PER OWNER REQUEST - WIRE TERMINATIONS AND ACCESS CONTROL SYSTEM INSTALLATION SHALL BE HANDLED BY OWNER. ALL DATA WIRING SHALL BE FED FROM IT ROOM.

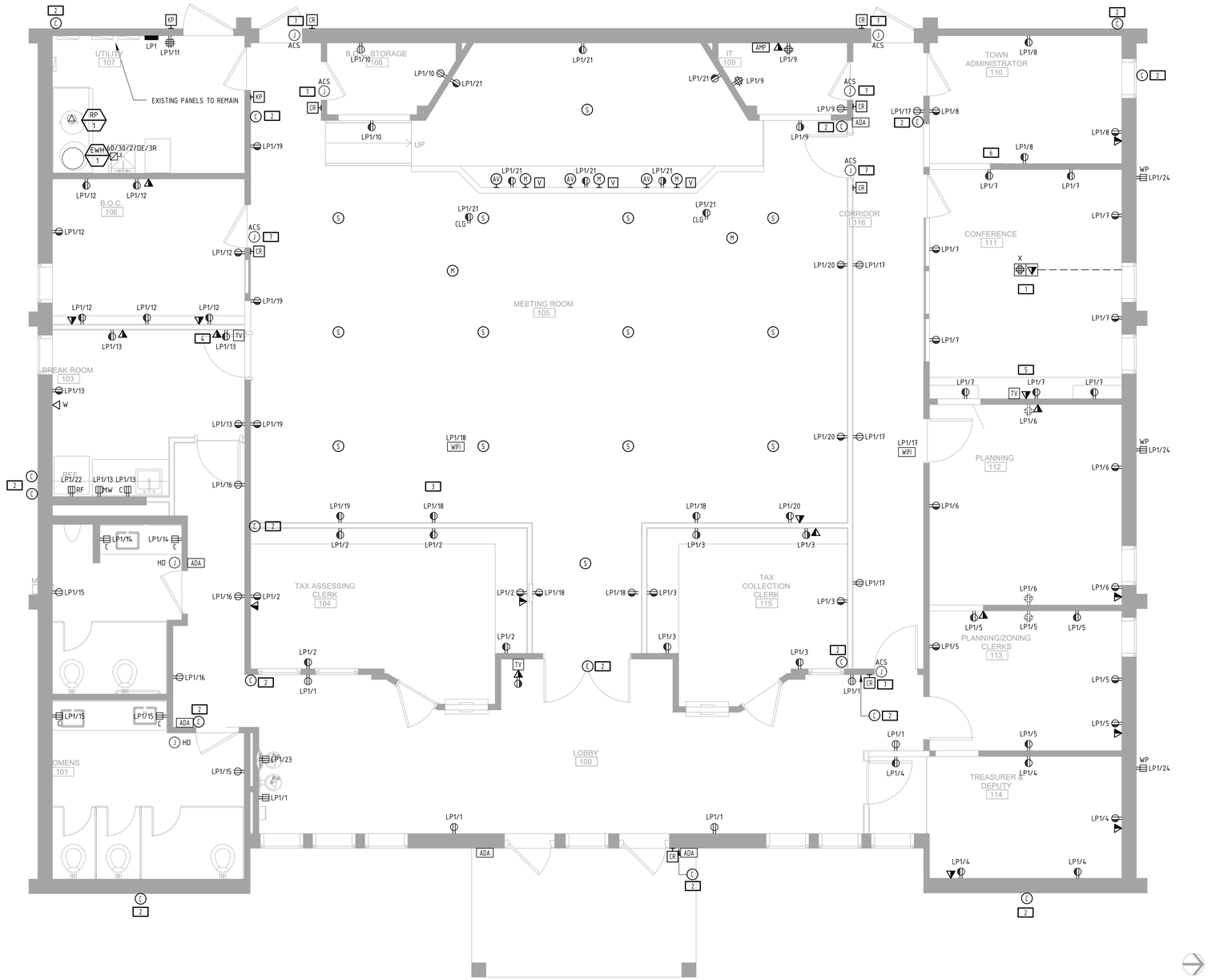

1 ELECTRICAL - POWER FLOOR PLAN
SCALE: 1/4" = 1'-0"
0 4'-0" 8'-0" 12'-0"

RENOVATIONS TO THE EXETER TOWN HALL

742 TEN ROD RD, EXETER, RI, 02822

BREWSTER THORNTON GROUP ARCHITECTS LLP
317 Iron Horse Way, Suite 202
Providence, RI 02908
401.861.1600
brewsterthornton.com

ZAINO & ASSOCIATES
Zaino & Associates
183 PROVIDENCE-NEW LONDON TURNPIKE
NORTH STONINGTON, CT 06359

JOB NO.	DATE
2605	08/31/2026

ISSUE : BID DOCUMENTS

NO.	REVISION DESCRIPTION	DATE

SHEET TITLE
ELECTRICAL POWER FIRST FLOOR PLAN

SHEET
E301

EMERGENCY LIGHTING SHEET NOTES

1. COORDINATE COLOR OF EXIT SIGN ILLUMINATION WITH OWNER/ARCHITECT PRIOR TO SHOP DRAWING REVIEW PROCESS.
2. EMERGENCY LIGHTING SHALL BE CIRCUITED AHEAD OF ANY AND ALL LIGHTING CONTROLS UNLESS OTHERWISE SPECIFIED.
3. GENERAL LIGHT FIXTURES WITH INTEGRAL BATTERY BACK-UP USED FOR THE PURPOSE OF EMERGENCY LIGHTING SHALL BE INSTALLED WITH A UL924 EMERGENCY BYPASS / SHUNT RELAY.

FIRE ALARM SHEET NOTES

1. COORDINATE FIRE ALARM DEVICE MOUNTING WITH ARCHITECTURAL PLAN PRIOR TO INSTALLATION. ANY DEVIATION FROM THE DESIGN DOCUMENTS SHALL BE SUBMITTED TO THE ENGINEER IN WRITING FOR APPROVAL PRIOR TO ROUGH-IN.
2. COORDINATE WITH FIRE PROTECTION PLANS FOR LOCATIONS AND QUANTITIES OF FLOW, TAMPER, AND PRESSURE SWITCHES. PROVIDE A MONITOR MODULE AT EACH DEVICE LOCATION TO TIE INTO THE FIRE ALARM CONTROL PANEL.
3. ALL NEW INITIATION AND NOTIFICATION DEVICES INCLUDED IN THIS SCOPE OF WORK SHALL BE COMPATIBLE WITH THE EXISTING FIRE ALARM CONTROL PANEL. VERIFY DEVICES ARE COMPATIBLE WITH FIRE ALARM MANUFACTURER PRIOR TO FURNISHING.
4. E.C. SHALL INCLUDE IN BID COORDINATION AND INSTALLATION OF A BI-DIRECTIONAL AMPLIFIER FOR FIRE DEPARTMENT COMMUNICATION. THIS SHALL BE INCLUDED AS A SEPARATE LINE ITEM IN THE BID AND SHALL INCLUDE: COORDINATION, FURNISHING, INSTALLATION, AND TESTING. IF DEEMED NOT REQUIRED BY THE FIRE DEPARTMENT, OR TESTING AGENCY A CREDIT SHALL BE ISSUED TO THE OWNER FOR THIS LINE ITEM.
5. E.C. SHALL FURNISH AND INSTALL REMOTE INDICATING LIGHTS/TEST SWITCHES FOR DUCT SMOKE DETECTORS. COORDINATE EXACT LOCATION IN FIELD.
6. E.C. SHALL PROVIDE ANY AND ALL AUXILIARY EQUIPMENT IN ORDER TO PROVIDE A COMPLETE, PROPERLY FUNCTIONING SYSTEM. COORDINATE REQUIREMENTS WITH LOCAL MANUFACTURERS REP.
7. ALL FIRE ALARM STROBE SIGNAL DEVICES SHALL BE SYNCHRONIZED TYPE DEVICES AND COMPLY WITH ADA REQUIREMENTS.
8. REPLACE THE EXISTING FIRELITE 2500 PANEL WITH NEW FIRELITE MS-5 CONVENTIONAL PANEL.
9. UPGRADE EXISTING RADIO MASTER BOX

KEYED SHEET NOTES

1. PULL STATIONS SHALL BE MOUNTED WITHIN 5'-0" OF DOOR. (TYPICAL FOR ALL)
2. EXISTING HEAT DETECTORS IN THE ATTIC SPACE SHALL REMAIN AND SHALL BE REWIRED TO NEW MAIN PANEL.
3. PROVIDE F.A. SHUTDOWN RELAY TO REMOVE POWER FROM AV EQUIPMENT IN EVENT OF ALARM CANDELAS.
4. HEAT DETECTOR SHALL BE PLACED UNDERNEATH STAGE. COORDINATE MOUNTING IN FIELD.

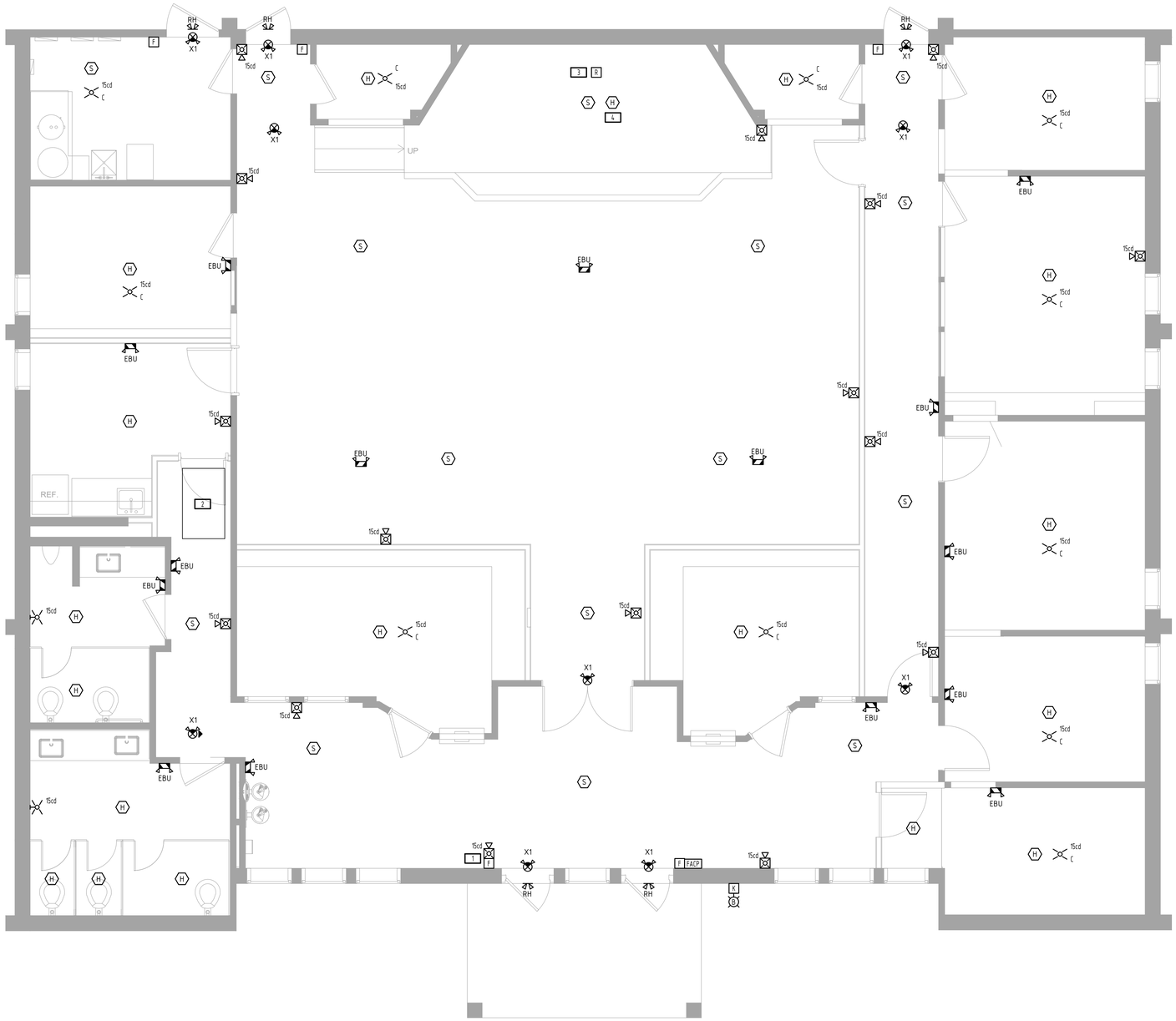

1 ELECTRICAL - LIFE SAFETY PLAN
SCALE: 1/4" = 1'-0"
0 4'-0" 8'-0" 12'-0"

RENOVATIONS TO THE EXETER TOWN HALL

742 TEN ROD RD, EXETER, RI, 02822

BREWSTER THORNTON GROUP ARCHITECTS LLP
317 Iron Horse Way, Suite 202
Providence, RI 02908
401.861.1600
brewsterthornton.com

ZAINO & ASSOCIATES
Zaino & Associates
183 PROVIDENCE-NEW LONDON TURNPIKE
NORTH STONINGTON, CT 06359

JOB NO.	DATE
2605	08/31/2026

ISSUE : BID DOCUMENTS

NO.	REVISION DESCRIPTION	DATE

SHEET TITLE
ELECTRICAL LIFE SAFETY PLAN

SHEET
E302

EQUIPMENT WIRING SCHEDULE

AMPACITY	Φ	WIRE AND CONDUIT SIZE
15,20	1	2#12 + 1#12 GROUND IN 3/4" CONDUIT
15,20	3	3#12 + 1#12 GROUND IN 3/4" CONDUIT
25,30	1	2#10 + 1#10 GROUND IN 3/4" CONDUIT
25,30	3	3#10 + 1#10 GROUND IN 3/4" CONDUIT
35,40	1	2#8 + 1#10 GROUND IN 3/4" CONDUIT
35,40	3	3#8 + 1#10 GROUND IN 3/4" CONDUIT
45,50,55	1	2#6 + 1#10 GROUND IN 3/4" CONDUIT
45,50,55	3	3#6 + 1#10 GROUND IN 3/4" CONDUIT
60	1	2#4 + 1#10 GROUND IN 1" CONDUIT
60	3	3#4 + 1#10 GROUND IN 1" CONDUIT
70	3	3#4 + 1#8 GROUND IN 1" CONDUIT
80	3	3#3 + 1#8 GROUND IN 1-1/4" CONDUIT
90	3	3#2 + 1#8 GROUND IN 1-1/4" CONDUIT
100,110	3	3#1 + 1#6 GROUND IN 1-1/4" CONDUIT
125,150	3	3#1/0 + 1#6 GROUND IN 1-1/2" CONDUIT
175	3	3#2/0 + 1#6 GROUND IN 2" CONDUIT
200	3	3#3/0 + 1#4 GROUND IN 2" CONDUIT

NOTE:
1. THE AMPERAGE AND PHASE OF THE WIRING ON THIS SCHEDULE CORRESPONDS TO THE CIRCUIT BREAKER SIZE IN THE ELECTRICAL CONNECTION SCHEDULE FOR MECHANICAL EQUIPMENT. PROVIDE WIRING AS INDICATED UNLESS OTHERWISE SPECIFIED.
2. WIRE SIZE IS BASED ON THE USE OF COPPER CONDUCTORS.

FIRE STOPPING NOTES

1. GENERAL: FIRE STOPPING SHALL BE PROVIDED BY THIS CONTRACTOR FOR ALL FLOOR, CEILING AND FIRE RATED WALL PENETRATIONS FOR CONDUIT, SLEEVES AND/OR CABLING AS REQUIRED BY JOB CONDITIONS.
2. THE CONTRACTOR SHALL PROVIDE A FIRE STOP SYSTEM IN ACCORDANCE WITH THE FOLLOWING:

2.1. THE SYSTEM SHALL CONSIST OF A WATER BASED SEALANT AND SUITABLE DAMMING MATERIALS (WHERE REQUIRED) AND BE INSTALLED PER MANUFACTURER'S REQUIREMENTS.

2.2. THE SEALANT SUPPLIED SHALL BE A TWO STAGED INTUMESCENT AND CAPABLE OF EXPANDING UP TO 8 TIMES ITS ORIGINAL VOLUME.

2.3. THE SEALANT SUPPLIED SHALL CONTAIN NO ASBESTOS, NO FIBERGLASS, AND NO SOLVENTS NOT CORROSIVE MINERAL SALTS OF ANY KIND.

2.4. THE SEALANT SHALL FORM A SURFACE CAPABLE OF BEING SANDED AND PAINTED TO MATCH SURROUNDING SURFACES AND SHALL BE IMPERVIOUS TO WATER WHEN DRY.

2.5. THE FIRE STOP SYSTEM SHALL BE TESTED TO THE TIME/TEMPERATURE REQUIREMENTS OF ASTM E119 AND SHALL BE UL1479 (ASTM E814) AND CLASSIFIED FOR UP TO 3 HOURS.

2.6. THE FIRE STOP SEALANT SHALL BE SPECSEAL SEALANT AS MANUFACTURED BY SPECIFIED TECHNOLOGIES, INC. OR APPROVED EQUAL.

2.7. SPECIAL CARE SHALL BE TAKEN WITH ELECTRICAL SYSTEMS NOT TO COMPROMISE ANY OF THE BUILDING FIRE PARTITIONS, FLOORS, WALLS OR MEMBRANES. PROVIDE ALL FIRESTOPPING REQUIRED TO COMPLY WITH THE BUILDING CODE, THE ELECTRICAL CODE AND THE UL LISTING OF EACH ASSEMBLY. COORDINATE LOCATIONS AND TYPES OF MEMBRANES WITH ARCHITECT.

SEISMIC RESTRAINT NOTES

1. GENERAL: IT IS THE INTENT OF THIS SEISMIC SPECIFICATION TO KEEP ALL ELECTRICAL BUILDING SYSTEM COMPONENTS IN PLACE DURING A SEISMIC EVENT. ALL ELECTRICAL SYSTEMS MUST BE INSTALLED IN STRICT ACCORDANCE WITH SEISMIC CODES, COMPONENT MANUFACTURER'S AND BUILDING CONSTRUCTION STANDARDS. WHENEVER A CONFLICT OCCURS BETWEEN THE MANUFACTURER'S OR CONSTRUCTION STANDARDS, THE MOST STRINGENT SHALL APPLY.

2. THIS CONTRACTOR SHALL ENGAGE A PROFESSIONAL STRUCTURAL ENGINEER REGISTERED IN THE JURISDICTION OF THIS PROJECT TO REVIEW THE ENTIRE INSTALLATION TO DETERMINE ALL SEISMIC RESTRAINT REQUIREMENTS AND METHODS. CONTRACTOR SHALL SUBMIT A REPORT OUTLINING THE STRUCTURAL ENGINEER'S REVIEW AS WELL AS SEISMIC RESTRAINT SHOP DRAWINGS AND SUPPORTING CALCULATIONS PREPARED BY THE PROFESSIONAL STRUCTURAL ENGINEER FOR REVIEW BY THE ARCHITECT.

3. SEISMIC RESTRAINTS SHALL BE DESIGNED IN ACCORDANCE WITH SEISMIC FORCE LEVELS AS DETAILED IN THE APPLICABLE BUILDING CODE.

3.1. ALL EQUIPMENT, CONDUIT AND PULL BOXES SHALL BE ADEQUATELY RESTRAINED TO RESIST SEISMIC FORCES. RESTRAINT DEVICES SHALL BE DESIGNED AND SELECTED TO MEET SEISMIC REQUIREMENTS AS DEFINED IN THE LATEST ISSUE OF THE BOCA NATIONAL BUILDING CODE IN ACCORDANCE WITH THE APPLICABLE SEISMIC ZONE.

3.2. ANCHOR BOLT CALCULATORS, SIGNED AND STAMPED BY A REGISTERED PROFESSIONAL ENGINEER, SHALL BE SUBMITTED SHOWING ADEQUACY OF THE BOLT SIZING AND TYPE. STAMPED CALCULATIONS SHALL ALSO BE FURNISHED FOR ANCHORS ON RESTRAINT DEVICES, CABLES, ISOLATORS AND RIGIDLY MOUNTED EQUIPMENT.

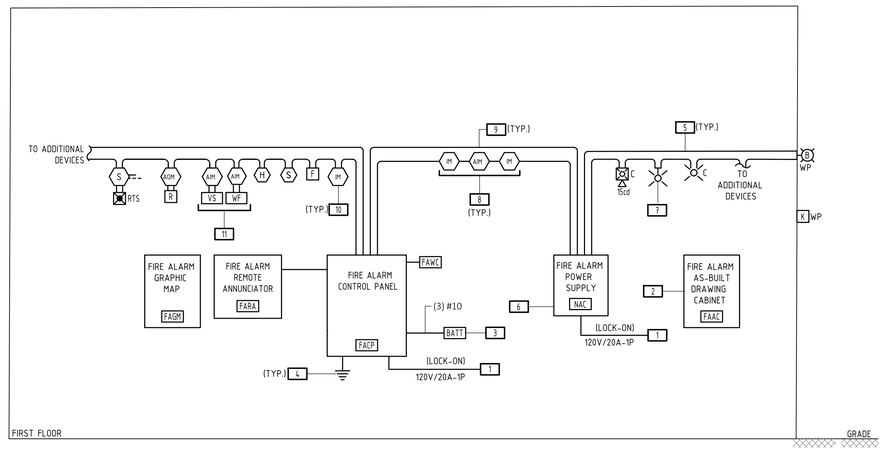

KEYED NOTES:

1. ELECTRICAL CONTRACTOR SHALL PROVIDE A DEDICATED 120 VOLT CIRCUIT FROM HOUSE PANEL AND 20A/1P BREAKER WITH LOCK-ON DEVICE VIA 2#12+#12G IN 3/4"C AS REQUIRED.
2. PROVIDE FIRE ALARM AS-BUILT DRAWINGS, RECORD OF COMPLETION, AND POINT LIST AND LOCATE WITHIN NEW FIRE ALARM AS-BUILT DRAWINGS CABINET. PROVIDE FIRE ALARM AS-BUILT DRAWING CABINET:

   MANUFACTURER: SPACE AGE ELECTRONICS
   MODEL NUMBER: DBX SIZE A 26-1/4" WIDE X 14-1/4" HIGH X 4" DEEP.
3. PROVIDE TYPICAL BATTERY CABINET IF APPLICABLE; SIZE TO BE DETERMINED BY FIRE ALARM SYSTEM MANUFACTURER.
4. GROUND FIRE ALARM EQUIPMENT PER NEC ARTICLE 250 AS REQUIRED.
5. ALL FIRE ALARM DEVICES SHALL BE ADDRESSABLE. ALSO PROVIDE SEPARATE SLC LOOP FOR A COMPLETE AND OPERATIONAL SYSTEM.
6. ONE FIRE ALARM POWER SUPPLY FOR NOTIFICATION DEVICES IS SHOWN FOR DIAGRAMMATIC PURPOSES, PROVIDE QUANTITY OF POWER SUPPLIES AS REQUIRED FOR A COMPLETE OPERATIONAL SYSTEM.
7. ALL STROBES SHALL BE SYNCHRONIZED. EXACT METHOD FOR SYNCHRONIZATION SHALL BE SPECIFIC TO EACH FIRE ALARM MANUFACTURER. PROVIDE EVIDENCE OF SYNCHRONIZATION IN FIRE ALARM SUBMITTAL.
8. PROVIDE FIRE ALARM MONITOR MODULE AND ISOLATION MODULES AS SHOWN TO SUPERVISE FIRE ALARM POWER SUPPLY.
9. TO ACTIVATE FIRE ALARM POWER SUPPLY FOR NOTIFICATION DEVICES.
10. PROVIDE ISOLATION MODULES EVERY 25 DEVICES AND EVERY CHANGE OF FLOOR.
11. TAMPER AND FLOW SWITCHES SERVING THIS SPACE APPROXIMATELY 150' AWAY. COORDINATE EXACT QUANTITIES WITH FP CONTRACTOR AND COORDINATE FINAL LOCATION IN FIELD.

FIRE ALARM SYSTEM GENERAL NOTES:

1. ALL WIRING SHALL BE PER MANUFACTURER'S SPECIFICATIONS.
2. THIS SCHEMATIC IS TYPICAL. WIRE TO ALL DEVICES ON ALL LOOPS AND CIRCUITS. SEE PLAN VIEWS FOR TYPES AND QUANTITIES OF DEVICES.
3. ALL FIRE ALARM WIRING SHALL BE RUN CONTINUOUS FROM DEVICE TO DEVICE.
4. OUTGOING AND RETURN CONDUCTORS MUST BE RUN IN SEPARATE RACEWAYS. PROVIDE MINIMUM SEPARATION OF 1 FOOT WHERE THE CABLE IS RUN VERTICALLY AND A 4 FEET SEPARATION WHERE THE CABLE IS RUN HORIZONTALLY. (SEE NFPA AND LOCAL CODES).
5. PROVIDE ANY ADDITIONAL REMOTE POWER SUPPLIES AS NECESSARY. PROVIDE ADDITIONAL SMOKE DETECTORS AS NECESSARY PER NFPA.
6. PROVIDE INTERMEDIATE RELAYS AS NEEDED.
7. SYNCHRONIZE ALL STROBE LIGHTS.
8. VERIFY WIRING TYPE FOR INITIATING LOOP.
9. VERIFY ADDITIONAL WIRING (e.g. 24V POWER FOR MODULES) WITH SPECIFIED MANUFACTURER.
10. PROVIDE NEW FIRE ALARM POWER SUPPLIES, AMPLIFIERS, DEVICES, WIRING, ETC. AS REQUIRED TO SERVE NEW FIRE ALARM NOTIFICATION DEVICES SHOWN ON THE DRAWINGS.
11. PROVIDE ISOLATION MODULES AS REQUIRED IN ACCORDANCE WITH THE STATE FIRE CODES. PROVIDE A MINIMUM OF ONE PER FLOOR. PROVIDE AN ISOLATION MODULE FOR EVERY 25 INITIATING DEVICES.
12. PROVIDE 25% SPARE CAPACITY ON INITIATIONS AND NOTIFICATIONS LOOPS.
13. ALL FIRE ALARM EQUIPMENT INCLUDING AND NOT LIMITED TO FIRE ALARM PANELS, CABINETS, ANNUNCIATOR, PULL STATIONS, ETC. SHALL BE LOCKABLE TYPE. PROVIDE KEY ALIKE LOCKABLE EQUIPMENT AS REQUIRED.

1 FIRE ALARM RISER DIAGRAM

NOT TO SCALE

RENOVATIONS TO THE
EXETER TOWN HALL
742 TEN ROD RD, EXETER, RI, 02822

BREWSTER THORNTON GROUP ARCHITECTS LLP
317 Iron Horse Way, Suite 202
Providence, RI 02908
401.861.1600
brewsterthornton.com

ZAINO & ASSOCIATES
Zaino & Associates
183 PROVIDENCE-NEW LONDON TURNPIKE
NORTH STONINGTON, CT 06359

JOB NO.	DATE
2605	08/31/2026

ISSUE : BID DOCUMENTS

NO.	REVISION DESCRIPTION	DATE

SHEET TITLE
FIRE ALARM RISER DIAGRAM

SHEET
E400

LIGHT FIXTURE SCHEDULE

TYPICAL LIGHTING NOTES:

1. MOUNTING ABBREVIATIONS, "G" = RECESSED IN GRID, "F" = RECESSED IN FLANGE, "S" = SURFACE, "W" = WALL, "P" = PENDANT, "GR" = GROUND, "U" = UNIVERSAL, "T" = TRACK.
2. LIGHTING FIXTURES SHALL BE FURNISHED COMPLETE WITH ALL HARDWARE, HANGERS, ACCESSORIES, ETC. FOR A COMPLETE AND PROPER INSTALLATION. VERIFY ROOM SURFACE CONSTRUCTION/FINISH TYPES PRIOR TO THE RELEASE OF ANY LIGHTING FIXTURES TO ENSURE PROPER MOUNTING PROVISIONS AND FIXTURES FITTINGS. REFER TO ARCHITECTURAL DRAWINGS/ELEVATIONS.
3. VERIFY ALL LIGHTING FIXTURE MOUNTING HEIGHTS AND LOCATIONS WITH ARCHITECTURAL DRAWINGS/ELEVATIONS PRIOR TO THE START OF ROUGHING. PENDANT FIXTURES SHALL BE MINIMUM 19" FROM TOP OF FIXTURE TO CEILING UNLESS OTHERWISE NOTED.
4. ALL LED SOURCES, DRIVERS, AND CONTROLS SHALL MEET THE LATEST UTILITY CO. INCENTIVE REQUIREMENTS. REFER TO THE LATEST PROGRAM REQUIREMENTS DOCUMENTATION AND COORDINATE WITH UTILITY CO. TO ENSURE COMPLIANCE.
5. EXIT SIGNS SHALL BE TYPICALLY MOUNTED ON CEILINGS WHERE VISIBLE OR ON WALL WHERE CEILING MOUNTING IS NOT PRACTICAL. PRIOR TO ROUGHING COORDINATE WITH ARCHITECTURAL DRAWINGS/ELEVATIONS FOR SPECIFIC MOUNTING DIRECTION AND FOR LOCATION.
6. PROVIDE SIGNIFY #SWZ-REMOTE FOR PROGRAMMING OF ALL SPACEWISE DEVICES.

TYPE	DESCRIPTION	MANUFACTURER	MODEL/SERIES	VOLTAGE	MTG.	SOURCE					DIMMING	NOTES
						TYPE	WATTAGE	LUMENS	MIN. CRI	COLOR		
INTERIOR FIXTURES												
L1	2x4 TROFFER	LITHONIA LIGHTING	GTL SERIES RECESSED TROFFER	UNV		LED			80		0-10V	
L3	PENDANT	ACCLAIM LIGHTING	IN21142WG DARIA 3-LIGHT PENDANT			LED			80		0-10V	
SC	WALL SCONCE	ACCLAIM LIGHTING	IN40062BK DAWES 3-LIGHT WALL SCONCE		W	LED		-	80		0-10V	-

PANEL: LP1 — 120/208V 1ø 3W

MAIN (A): 200
BUS RATING (A): 250
AIC: 22,000
MAIN LUG
MAIN BREAKER X

SHUNT TRIP MAIN
200% RATED NEUTRAL
ISOLATED GROUND
GROUND FAULT MAIN

NOTES:
G = GFCI
S = SHUNT TRIP
L = LOCK ON

CKT No.	LOAD DESCRIPTION	Note	LOAD kVA	CIRCUIT BREAKER	CKT No.	LOAD DESCRIPTION	Note	LOAD kVA	CIRCUIT BREAKER
1	LOBBY		1.08	15A/1P	2	TAX ASSESSING CLERK		1.08	15A/1P
3	TAX COLLECTION CLERK		1.08	15A/1P	4	TREASURER & DEPUTY		0.9	15A/1P
5	PLANNING/ZONING CLERK		1.08	15A/1P	6	PLANNING		0.9	15A/1P
7	CONFERENCE		1.62	15A/1P	8	OFFICE		0.72	15A/1P
9	IT		0.9	15A/1P	10	BOC STORAGE		0.36	15A/1P
11	UTILITY		0.36	15A/1P	12	BOC		1.26	15A/1P
13	BREAK ROOM	G	1.08	15A/1P	14	MENS BATHROOM		0.54	15A/1P
15	WOMENS BATHROOM		0.54	15A/1P	16	LEFT SIDE CORRIDOR		0.54	15A/1P
17	RIGHT SIDE CORRIDOR		0.72	15A/1P	18	MEETING ROOM (ENTRANCE)		0.72	15A/1P
19	MEETING ROOM (LEFT SIDE)		0.54	15A/1P	20	MEETING ROOM (RIGHT SIDE)		0.54	15A/1P
21	MEETING ROOM (FRONT)		1.08	15A/1P	22	RF IN BR	G	0.18	15A/1P
23	WATER COOLER		0.18	15A/1P	24	OUTDOOR MECH RECEPTACLE		0.54	15A/1P
25	HD IN WOMENS	G	0.5	20A/1P	26	HD IN MENS	G	0.5	20A/1P
27	PUMP "RP-1"		0.1	20A/1P	28	SPARE			15A/1P
29	EWH		4.5	30A/2P	30	SPARE			15A/1P
31					32	SPARE			15A/1P
33	SPARE			15A/1P	34	SPARE			15A/1P
35	SPARE			15A/1P	36	SPARE			15A/1P
37	EXISTING PANEL "A"			200A/2P	38	EXISTING PANEL "B"			100A/2P
39					40				
41					42				

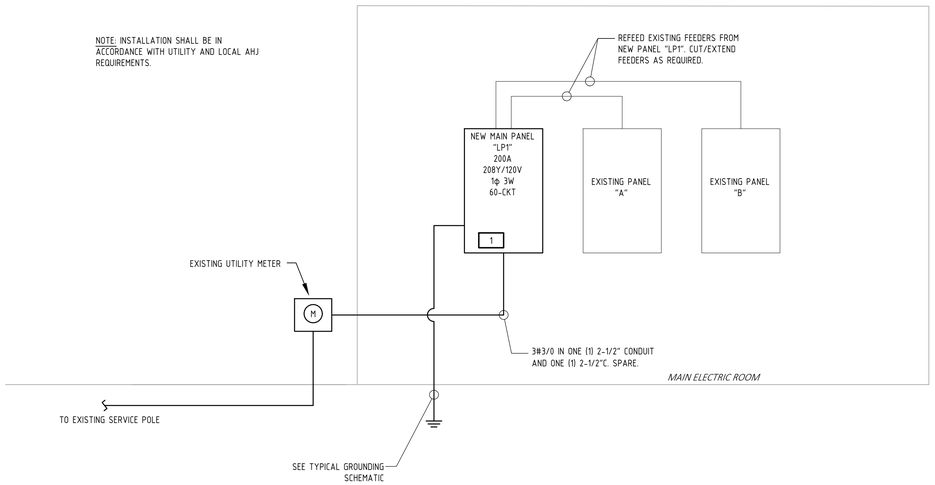

1 PARTIAL POWER DISTRIBUTION ONE-LINE DIAGRAM

NOT TO SCALE

RISER DIAGRAM SHEET NOTES

1. E.C. SHALL COORDINATE WITH LOCAL UTILITY COMPANY FOR UTILITY WORK ASSOCIATED WITH THIS PROJECT.
2. PROVIDE ALL GROUNDING INCLUDING GREEN EQUIPMENT GROUND IN ALL RACEWAYS. GROUND BUILDING SERVICE ACCORDING TO NEC AND ALSO TO STREET SIDE OF WATER METER AND TO APPROVED GROUND ROD.
3. PROVIDE GROUNDING AND BONDING BUSHINGS FOR SERVICE RACEWAYS PER NEC. SIZE THE BONDING JUMPER PER NEC.
4. GROUND ALL TRANSFORMERS ACCORDING TO NEC HANDBOOK (GROUNDING ELECTRODE CONDUCTOR CONNECTION AT TRANSFORMER). SIZE BONDING JUMPER PER NEC.
5. CONTRACTOR SHALL COORDINATE WITH LOCAL UTILITY CO. REPRESENTATIVE TO PROVIDE & INSTALL A UTILITY METER, IN METER SOCKET PROVIDE BY E.C. IT SHALL BE THIS CONTRACTOR'S RESPONSIBILITY TO FIELD VERIFY ALL REQUIREMENTS PRIOR TO ANY WORK.
6. CONTRACTOR SHALL COORDINATE WITH LOCAL UTILITY CO. REPRESENTATIVE TO PROVIDE & INSTALL A PAD MOUNTED UTILITY TRANSFORMER. PRIMARY SERVICE FEEDERS, ROUTING, TRANSFORMER PAD CONSTRUCTION, LOCATION ETC. SHALL BE DESIGNED AND COORDINATED WITH OTHER TRADES AND ENGINEERS. IT SHALL BE THIS CONTRACTOR'S RESPONSIBILITY TO FIELD VERIFY ALL REQUIREMENTS PRIOR TO ANY WORK.
7. PRIMARY CONNECTIONS BY UTILITY COMPANY. SECONDARY CABLE & CONNECTIONS AT TRANSFORMER BY E.C. WITH UTILITY COMPANY SUPERVISION.

RISER DIAGRAM KEYED NOTES

1 EXISTING LIGHTING CONNECTIONS SHALL BE TRANSFERRED TO NEW PANEL "LP1". REFER TO E.C. FOR METHODS OF TRANSFER.

RENOVATIONS TO THE
EXETER TOWN HALL
742 TEN ROD RD, EXETER, RI, 02822

BREWSTER THORNTON GROUP ARCHITECTS LLP
317 Iron Horse Way, Suite 202
Providence, RI 02908
401.861.1600
brewsterthornton.com

ZAINO & ASSOCIATES
Zaino & Associates
183 PROVIDENCE-NEW LONDON TURNPIKE
NORTH STONINGTON, CT 06359

JOB NO. 2605 | DATE 08/31/2026

ISSUE : BID DOCUMENTS

NO.	REVISION DESCRIPTION	DATE

SHEET TITLE
ELECTRICAL RISER DIAGRAM AND DETAILS

SHEET
E500

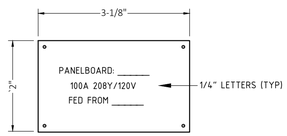

NOTES:

1. NAMEPLATES SHALL BE FURNISHED AND INSTALLED ON THE METER CENTERS/SWITCHBOARD AND METER CENTERS/SWITCHBOARD CIRCUIT BREAKERS, PANELBOARDS, TRANSFORMERS, JUNCTION BOXES, CABINETS FOR ALL SPECIAL PURPOSE SWITCHES, MOTOR DISCONNECT SWITCHES, STARTERS AND OTHER CONTROLS FURNISHED UNDER THIS CONTRACT, TO DESIGNATE THE EQUIPMENT CONTROLLED AND FUNCTION.
2. NAMEPLATES SHALL BE LAMINATED WHITE BAKELITE WITH 1/4" HIGH BLACK RECESSED LETTERS.
3. NAMEPLATES SHALL BE SECURELY ATTACHED TO THE EQUIPMENT WITH GALVANIZED SCREWS OR RIVETS.
4. ADHESIVES OR CEMENTS WILL NOT BE PERMITTED.

1 TYPICAL PANELBOARD NAMEPLATE DETAIL

NOT TO SCALE

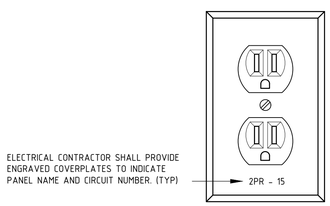

NOTE:

1. GENERAL RECEPTACLES AND COVERPLATES SHALL BE WHITE IN COLOR, UNLESS OTHERWISE INDICATED.

2 TYPICAL RECEPTACLE LABELING DETAIL

NOT TO SCALE

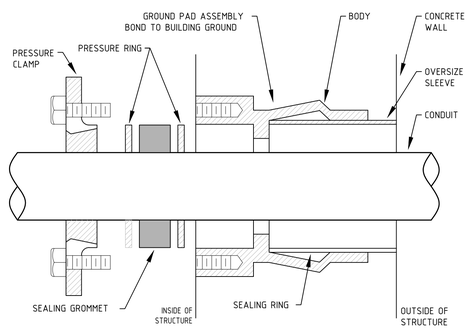

NOTES:

1. USE WATERTIGHT CONDUIT SEAL WHERE CONDUIT PENETRATIONS OF BUILDING EXTERIOR WALLS ARE BELOW GRADE AND FOR TUNNEL PENETRATIONS.
2. ADJUSTABLE GLAND LOCATED WHERE ACCESSIBLE.

3 CONDUIT PENETRATION DETAIL

NOT TO SCALE

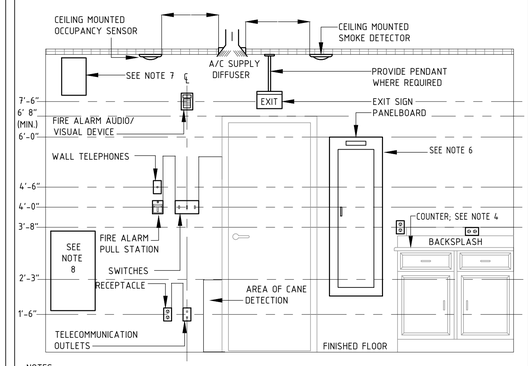

NOTES:

1. DEVICE LOCATIONS AND MOUNTING HEIGHTS SHALL BE CHECKED AGAINST THE ARCHITECTURAL PLANS AND ELEVATIONS PRIOR TO ROUGH-IN IN ORDER TO AVOID INTERFACES WITH CASEWORK, FURNITURE, WINDOWS, MIRRORS, EQUIPMENT, ETC.
2. LOCATIONS OF OUTLETS AND EQUIPMENT AS INDICATED ON THE DRAWINGS ARE APPROXIMATE. THE EXACT CENTER OF ALL OUTLETS SHALL BE PLACED IN COOPERATION WITH THE GENERAL CONTRACTOR AND ARCHITECT. CONTRACTOR SHALL EXAMINE ALL THE EXTERIOR DETAILS OF THE CONSTRUCTION DRAWINGS FOR OUTLET LOCATIONS NOT CONFORMING TO THE DETAIL ABOVE. WHERE DETAILED TO SPECIFIC LOCATIONS, THE ARCHITECTURAL DRAWINGS SHALL TAKE PRECEDENCE. IF AN OUTLET IS INSTALLED IN SUCH A LOCATION AS TO BE OUT OF PROPER RELATION TO BE CORRECTED BY AT THE EXPENSE OF THE CONTRACTOR UNDER THE DIRECTION OF THE ARCHITECT OR ENGINEER.
3. DEVICES SHALL BE CENTERED IN A COMMON VERTICAL PLANE. HEIGHT SHALL BE MEASURED FROM FINISHED FLOOR TO CENTERLINE OF DEVICE EXCEPT EXIT SIGNS, AND FIRE ALARM SIGNALS. COORDINATE LOCATIONS WITH MATERIALS SUCH AS MASONRY UNITS.
4. REFER TO THE ARCHITECTS ELEVATION DETAILS FOR EXACT MOUNTING HEIGHT AND LENGTH OF SURFACE RACEWAYS. RECEPTACLE MOUNTING HEIGHT ABOVE COUNTERS SHALL BE COORDINATED WITH CASEWORK HEIGHTS.
5. PROTRUDING OBJECTS CANNOT REDUCE THE MINIMUM WIDTH OF ACCESSIBLE ROUTES.
6. 4" MAX PROTRUDING FROM WALL FOR CANE.
7. OBJECTS ABOVE HEAD ROOM CLEARANCE (MIN. OF 7'-6") CAN PROTRUDE ANY AMOUNT.
8. OBJECT WITH LEADING EDGES WITHIN CANE SWEEP CAN PROTRUDE ANY AMOUNT.

4 TYPICAL DEVICE MOUNTING HEIGHTS DETAIL

NOT TO SCALE

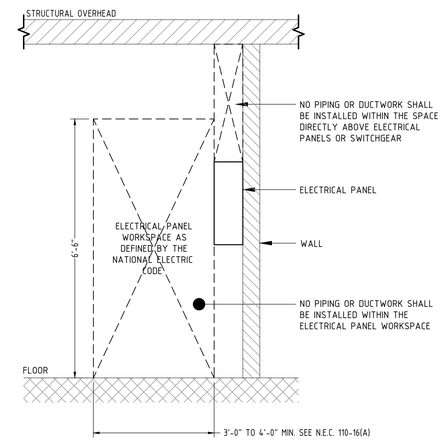

5 ELECTRICAL/MECHANICAL EQUIPMENT COORDINATION

NOT TO SCALE

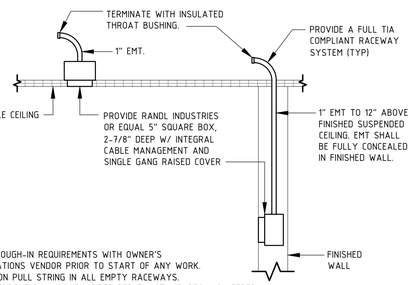

NOTES:

1. COORDINATE ROUGH-IN REQUIREMENTS WITH OWNER'S TELECOMMUNICATIONS VENDOR PRIOR TO START OF ANY WORK.
2. PROVIDE NYLON PULL STRING IN ALL EMPTY RACEWAYS.
3. PROVIDE ACCESSIBLE PULL BOXES, SIZED PER TIA STANDARDS, AS NEEDED.

6 TELECOMMUNICATIONS CONDUIT DETAIL

NOT TO SCALE

KEYED DETAIL NOTES:

1. TO LOCAL UNSWITCHED LIGHTING CIRCUIT SERVING THE AREA. CONCEAL ALL WIRING.
2. HARD WIRE TO JUNCTION BOX (DO NOT PLUG IN).
3. BATTERY UNIT. SEE SPECIFICATIONS. SIZE UNIT TO HANDLE FULL LOAD FOR 1 1/2 HOURS TO 87 1/2% OF VOLTAGE OR PROVIDE ADDITIONAL UNITS TO ACCOMPLISH THIS. MOUNT SO THAT IT CAN BE READILY MAINTAINED AND TESTED.
4. TO DEDICATED UNSWITCHED EXIT SIGN CIRCUIT. CONCEAL ALL WIRING.

7 EMERGENCY BATTERY SCHEMATIC

NOT TO SCALE

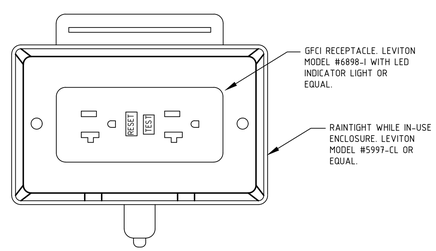

8 WEATHERPROOF RECEPTACLE DETAIL

NOT TO SCALE

RENOVATIONS TO THE
EXETER TOWN HALL
742 TEN ROD RD, EXETER, RI, 02822

BREWSTER THORNTON GROUP ARCHITECTS LLP
317 Iron Horse Way, Suite 202
Providence, RI 02908
401.861.1600
brewsterthornton.com

ZAINO & ASSOCIATES
Zaino & Associates
183 PROVIDENCE-NEW LONDON TURNPIKE
NORTH STONINGTON, CT 06359

JOB NO.	DATE
2605	08/31/2026

ISSUE : **BID DOCUMENTS**

NO.	REVISION DESCRIPTION	DATE

SHEET TITLE
ELECTRICAL DETAILS

SHEET
E600

ELECTRICAL SPECIFICATIONS:

PART 1 - GENERAL

1.1 GENERAL REQUIREMENTS:
ALL WORK SHALL BE IN ACCORDANCE WITH THE ARRANGEMENT, DETAILS AND LOCATION AS INDICATED ON THE CONTRACT DOCUMENTS, REFERENCE DRAWINGS AND ANY SUPPLEMENTAL ADDENDA, BULLETINS OR DRAWINGS ISSUED BY THE ARCHITECT/ENGINEER. LAYOUTS ARE DIAGRAMMATIC AND FINAL ARRANGEMENT OF EQUIPMENT SHALL SUIT FIELD CONDITIONS. REFER TO ALL DRAWINGS AND SPECIFICATIONS ASSOCIATED WITH THIS PROJECT FOR THE EXACT LOCATION OF ALL EQUIPMENT AND REQUIRED MOUNTING HEIGHTS PRIOR TO THE START OF ANY ROUGHING. THE RIGHT IS RESERVED TO MAKE ANY REASONABLE CHANGE IN LOCATION TO OUTLETS AND EQUIPMENT PRIOR TO ROUGHING AT NO ADDITIONAL EXPENSE TO THE OWNER.

1.2 SCOPE OF WORK:
THE SCOPE OF WORK CONSISTS OF THE INSTALLATION OF ALL MATERIALS TO BE FURNISHED UNDER THIS SECTION, AND WITHOUT LIMITING THE GENERALITY THEREOF, CONSISTS OF FURNISHING ALL LABOR, MATERIALS, EQUIPMENT, STORAGE, TRANSPORTATION, RIGGING, STAGING, APPURTENANCES AND SERVICES NECESSARY AND/OR INCIDENTAL TO PROPERLY COMPLETE ALL ELECTRICAL WORK SHOWN ON THE DRAWINGS, AS DESCRIBED IN THE SPECIFICATIONS, OR AS REASONABLY INFERRED FROM EITHER, IN THE OPINION OF THE ARCHITECT/ENGINEER AS BEING REQUIRED.

1.3 SITE VISIT:
BIDDERS ARE ADVISED TO VISIT THE SITE AND INFORM THEMSELVES AS THE TO CONDITIONS UNDER WHICH THIS WORK WILL BE PERFORMED. FAILURE TO DO SO WILL, IN NO WAY, RELIEVE THE SUCCESSFUL BIDDER FROM THE RESPONSIBILITY OF FURNISHING ANY MATERIALS OR PERFORMING ANY WORK IN ACCORDANCE WITH THE TRUE INTENT AND MEANING OF THE DRAWINGS AND SPECIFICATIONS. NO COMPENSATION WILL BE GRANTED FOR ADDITIONAL WORK CAUSED BY UNFAMILIARITY WITH SITE CONDITIONS THAT ARE VISIBLE OR READILY CONSTRUED BY AN EXPERIENCED OBSERVER. FIELD VERIFY MEASUREMENTS AND CIRCUITING ARRANGEMENTS THAT ARE SHOWN ON DRAWINGS. ARRANGEMENTS SHALL BE MADE WITH THE OWNER PRIOR TO THE VISIT FOR INSPECTION OF THE WORK AREA(S).

1.4 RELATED WORK:
THE FOLLOWING RELATED WORK IS NOT INCLUDED UNDER THIS SECTION AND SHALL BE PROVIDED UNDER OTHER SECTIONS. COORDINATE WILL ALL WITH ALL DIVISIONS TO ENSURE A COMPLETE INSTALLATION:

A. CUTTING AND PATCHING.
B. ALLOWANCES.
C. ALTERNATIVES.
D. ACCESS PANELS.
E. FIELD PAINTING.
F. TELECOMMUNICATION WIRING AND DEVICES UNLESS SPECIFICALLY NOTED ON DRAWINGS OR IN SPECIFICATIONS.

1.5 DEFINITIONS:
A. "CONCEALED" SHALL BE DEFINED AS AREAS WHERE CONDUIT AND WIRING IS LOCATED IN CHASES, WALLS, PARTITIONS, SHAFTS, AND ABOVE FINISHED CEILINGS.
B. "EXPOSED" SHALL MEAN CONDUIT AND WIRING RUN ON THE SURFACE OF THE BUILDING CONSTRUCTION.
C. "CONDUIT" SHALL MEAN IN ADDITION TO CONDUIT, ALL FITTINGS, HANGERS AND OTHER ACCESSORIES RELATING TO SUCH CONDUIT SYSTEMS.
D. "WIRING" SHALL MEAN WIRE, RACEWAY, BOXES AND FITTINGS.
E. "PROVIDE" SHALL MEAN "PROVIDED COMPLETE IN PLACE" THAT IS, "FURNISHED AND INSTALLED."

1.6 CODES, REGULATIONS, AND PERMITS:
ALL WORK UNDER THIS SECTION SHALL CONFORM TO THE LATEST EDITIONS OF THE LOCAL STATE BUILDING CODE, THE STATE ELECTRICAL CODE, NFPA, ANSI/NECA INSTALLATION STANDARDS, AND ALL OTHER LOCAL GOVERNING CODES. ELECTRICAL CONTRACTOR SHALL REFERENCE NEC 2014 AS GOVERNING CODE. GIVE NOTICES, FILE PLANS, OBTAIN AND PAY FOR PERMITS AND LICENSES AND OBTAIN NECESSARY APPROVALS FROM AUTHORITIES HAVING JURISDICTION. PERMITS SHALL BE SECURED THROUGH THE CITY. DELIVER CERTIFICATES OF INSPECTIONS TO ARCHITECT/ENGINEER. NO WORK SHALL BE COVERED BEFORE EXAMINATION AND APPROVAL BY ARCHITECT/ENGINEER AND THE AUTHORITIES HAVING JURISDICTION. IMPERFECT OR CONDEMNED WORK SHALL BE REPLACED WITH WORKING CONFORMING TO REQUIREMENTS AT NO ADDITIONAL COST TO THE OWNER, SUBJECT TO APPROVAL OF THE ARCHITECT/ENGINEER. IF WORK IS COVERED BEFORE DUE INSPECTION AND APPROVAL THE ELECTRICAL CONTRACTOR SHALL PAY COSTS OF UNCOVERING THE INSTALLED WORK, WHETHER IT MEETS CONTRACT REQUIREMENTS OR NOT.

1.7 MATERIALS:
ALL MATERIALS AND EQUIPMENT FURNISHED UNDER THIS SECTION SHALL BE NEW AND OF THE BEST GRADE FOR THE SERVICE INTENDED. IT IS NOT INTENDED THAT THESE SPECIFICATIONS OR DRAWINGS SHOW EVERY CONDUIT, FITTING, AND APPURTENANCE. ALL SUCH PARTS NECESSARY FOR THE COMPLETE EXECUTION OF THE WORK, IN ACCORDANCE WITH THE BEST PRACTICES OF THE TRADE AND TO THE SATISFACTION OF THE ARCHITECT/ENGINEER SHALL BE PROVIDED WHETHER THESE PARTS MAY HAVE SPECIFICALLY MENTIONED OR NOT, OR INDICATED ON THE DRAWINGS.

1.8 SHOP DRAWINGS:
WHERE THE DRAWINGS OR SPECIFICATIONS LIST SPECIFIC BRANDS OR CATALOG NUMBERS, ONLY THESE PRODUCTS MAY BE USED UNLESS THE WORDS: "OR APPROVED EQUAL" OR "BUT ARE NOT LIMITED TO" ARE INCLUDED. THE ENGINEER'S REVIEW IS FOR GENERAL CONFORMANCE WITH THE DESIGN INTENT. MARKINGS OR COMMENTS SHALL NOT BE CONSTRUED AS RELIEVING THE ELECTRICAL CONTRACTOR FROM COMPLIANCE WITH DRAWINGS AND SPECIFICATIONS, NOR DEPARTURES THEREOF. THE ELECTRICAL CONTRACTOR REMAINS RESPONSIBLE FOR DETAILS AND ACCURACY, FOR CONFORMING AND CORRECTNESS OF ALL QUANTITIES AND DIMENSIONS, FOR SELECTING FABRICATING PROCESSES, FOR TECHNIQUES OR ASSEMBLY, AND FOR PERFORMING THEIR WORK IN A SAFE MANNER. DEVIATIONS TO SPECIFIED MATERIALS SHALL BE AT THE SOLE RISK OF THE ELECTRICAL CONTRACTOR, WHO SHALL BE RESPONSIBLE FOR ALL ASSOCIATED CHANGES TO THIS AND OTHER TRADES. WITHIN THIRTY (30) DAYS AFTER THE DATE OF NOTICE TO PROCEED, AND BEFORE THE PROCUREMENT OF ANY MATERIALS AND EQUIPMENT, SUBMIT FOR APPROVAL A COMPLETE ITEMIZED LIST OF ALL THE MATERIALS AND EQUIPMENT INCORPORATED UNDER THIS SECTION. ALL SHOP DRAWING SUBMITTALS SHALL BE COMPLETE AND INCLUDE ALL PART 2 PRODUCTS AND VFDS OF THIS SPECIFICATION AND BE CLEARLY IDENTIFIED. NO CONSIDERATION WILL BE GIVEN TO PARTIAL SUBMITTALS, EXCEPT WITH PRIOR APPROVAL.

1.9 OPERATIONS AND MAINTENANCE MANUALS:
1. AT LEAST TWO (2) WEEKS PRIOR TO THE TIME OF TURNING OVER HIS CONTRACT TO THE OWNER FOR USE AND OCCUPANCY OR SUBSTANTIAL COMPLETION, SECURE AND DELIVER TO THE ARCHITECT/ENGINEER THREE (3) COMPLETE INDEXED BOUND FILES CONTAINING APPROVED OPERATING AND MAINTENANCE MANUALS, SHOP DRAWINGS, AND OTHER DATA AS FOLLOWS:
A. OPERATION DESCRIPTION OF ALL SYSTEMS.
B. COMPLETE SHOP DRAWINGS OF ALL EQUIPMENT.
C. PREVENTIVE MAINTENANCE INSTRUCTIONS FOR ALL SYSTEMS.
D. SPARE PARTS LISTS OF ALL SYSTEM COMPONENTS.
E. NAMES ADDRESS AND TELEPHONE NUMBERS OF ALL SUPPLIERS OF THE SYSTEMS.
2. NON-AVAILABILITY OF OPERATING AND MAINTENANCE MANUALS OR INACCURACIES THEREIN MAY BE GROUNDS FOR CANCELLATION AND POSTPONEMENT OF ANY SCHEDULED FINAL INSPECTION BY THE OWNER UNTIL SUCH TIME AS THE DISCREPANCY HAS BEEN CORRECTED AND/OR RETAINAGE OF SUFFICIENT MONIES TO PREPARE SAME.

1.10 RECORD DRAWINGS:
OWNER'S RECORD DRAWINGS SHALL BE UPDATED AS THE PROJECT PROGRESSES. MAINTAIN DOCUMENTS IN SAFE, DRY LOCATION. INDICATE CLEARLY AND ACCURATELY ANY CHANGES NECESSITATED BY FIELD CONDITIONS AND DIMENSION ALL CONCEALED RACEWAYS. THE ELECTRICAL CONTRACTOR SHALL DELIVER THE COMPLETED REPRODUCIBLE RECORD DRAWINGS AND CAD DISKS PROPERLY TITLED AND DATED TO ARCHITECT/ENGINEER. THESE RECORD DRAWINGS SHALL BECOME THE PROPERTY OF THE OWNER.

1.11 CHANGE ORDERS/PROPOSAL REQUEST:
A. DURING THE COURSE OF CONSTRUCTION, CHANGES IN THE WORK MAY OCCUR. WHEN A SIGNIFICANT CHANGE IS TO BE MADE, A PROPOSAL REQUEST WILL BE ISSUED.
B. PROVIDE A COMPLETE COST BREAKDOWN WHEN RESPONDING TO EACH PROPOSAL REQUEST.
C. EACH ITEM OF WORK TO BE PRICED SEPARATELY.
D. EACH LINE ITEM TO BE BROKEN DOWN INCLUDING QUANTITIES AND LISTING SEPARATELY LABOR AND MATERIAL.
E. BOTH CREDITS AND EXTRAS SHALL BE SEPARATELY AND CLEARLY QUANTIFIED.
F. ALLOWANCES FOR OVERHEAD AND PROFIT SHALL BE AS LISTED IN THE SUPPLEMENTARY CONDITIONS.
G. IF YOU BECOME AWARE OF A FIELD CONDITION, CODE REQUIREMENT, ERROR, OR OMISSION THAT YOU FEEL SHOULD RESULT IN A CHANGE TO THE WORK, PLEASE CONTACT THE ENGINEER FOR DISCUSSION. THE ENGINEER MAY BE ABLE TO CLARIFY THE SITUATION AND AVOID UNNECESSARY PAPERWORK.
H. IT IS RECOGNIZED THAT THE OWNER BENEFITS WHEN THE CONSTRUCTION PROCESS IS A COOPERATIVE EFFORT INSTEAD OF AN ADVERSARIAL RELATIONSHIP. REASONABLE GIVE-AND-TAKE ALLOWS THE CONSTRUCTION PROCESS TO MOVE SMOOTHLY. YOUR EFFORTS IN THIS REGARD WILL BE APPRECIATED BY ALL PARTIES.

1.12 GUARANTEE AND SERVICE:
THE ELECTRICAL CONTRACTOR SHALL GUARANTEE THE PERFORMANCE OF THE INSTALLATION AND ALL EQUIPMENT INCLUDED IN THIS SECTION IN WRITING FOR ONE (1) YEAR FROM THE DATE OF FINAL ACCEPTANCE BY THE ENGINEER. SHOULD ANY DEFECTS IN MATERIALS OR WORKMANSHIP APPEAR DURING THIS PERIOD, THEY SHALL BE CORRECTED OR REPLACED BY THE ELECTRICAL CONTRACTOR TO THE SATISFACTION OF THE ARCHITECT/ENGINEER, AT NO ADDITIONAL COST TO THE OWNER.

1.13 COORDINATE WITH OTHER TRADES:
CONFER WITH OTHER TRADES AND FURNISH IN WRITING TO THE ARCHITECT/ENGINEER ANY INFORMATION NECESSARY TO PERMIT THE WORK OF ALL TRADES TO BE INSTALLED SATISFACTORILY AND WITH THE LEAST POSSIBLE INTERFERENCE OR DELAY. WORK INSTALLED THAT CREATED INTERFERENCE OR RESTRICTS ACCESS REQUIRED BY CODE OR TO CONDUCT MAINTENANCE AND/OR ADJUSTMENTS SHALL BE MODIFIED AT NO ADDITIONAL COST TO THE OWNER. FURNISH TO OTHER TRADES ANY INFORMATION REQUIRED FOR THE PURPOSE OF COORDINATING ADJACENT WORK.

1.14 CUTTING AND PATCHING:
INCLUDE ALL CORING, CUTTING, PATCHING AND FIREPROOFING NECESSARY FOR THE EXECUTION OF THIS SECTION. STRUCTURAL ELEMENTS SHALL NOT BE CUT WITHOUT WRITTEN APPROVAL OF THE ARCHITECT/ENGINEER. REPAIR AND PATCH AROUND THE WORK SPECIFIED HEREIN TO MATCH THE EXISTING ADJACENT SURFACES TO THE SATISFACTION OF THE ARCHITECT/ENGINEER. FILL AND PATCH ALL OPENINGS OR HOLES LEFT IN THE EXISTING STRUCTURES BY THE REMOVAL OF EXISTING EQUIPMENT THAT IS PART OF THIS SECTION OF THE SPECIFICATIONS. APPLY FIRESTOPPING TO CABLE AND RACEWAY SLEEVES AND OTHER PENETRATIONS OF FIRE-RATED FLOOR AND WALL ASSEMBLIES TO RESTORE ORIGINAL UNDISTURBED FIRE-RESISTANCE RATINGS OF ASSEMBLIES.

1.15 HOISTING, SCAFFOLDING AND PLANKING:
INCLUDE THE FURNISHING, SETUP-UP AND MAINTENANCE OF ALL HOISTING MACHINERY, CRANES, SCAFFOLDS, STAGING AND PLANKING AS REQUIRED FOR THE EXECUTION OF WORK FOR THIS SECTION.

1.16 SAFETY REQUIREMENTS:
LIFE SAFETY AND ACCIDENT PREVENTION SHALL BE A PRIMARY CONSIDERATION. COMPLY WITH ALL SAFETY REQUIREMENTS OF THE OWNER AND OSHA THROUGHOUT THE ENTIRE CONSTRUCTION PERIOD OF THE PROJECT. FURNISH, PLACE AND MAINTAIN PROPER GUARDS AND ANY OTHER NECESSARY CONSTRUCTION REQUIRED TO SECURE SAFETY OF LIFE AND PROPERTY.

1.17 ACCESSIBILITY:
ALL WORK PROVIDED UNDER THIS SECTION SHALL BE PROVIDED SO THAT PARTS REQUIRING PERIODIC INSPECTION, MAINTENANCE AND REPAIR ARE READILY ACCESSIBLE, WORK OF THIS TRADE SHALL NOT INFRINGE UPON THE CLEARANCES OF OTHER TRADES.

1.18 PROTECTION OF WORK AND PROPERTY:
THE ELECTRICAL CONTRACTOR SHALL BE RESPONSIBLE FOR THE CARE AND THE PROTECTION OF ALL WORK INCLUDED UNDER THIS SECTION UNTIL THE COMPLETION AND FINAL ACCEPTANCE OF THIS PROJECT. PROTECT ALL EQUIPMENT AND MATERIALS FROM DAMAGE FROM ALL CAUSES INCLUDING, BUT NOT LIMITED TO, FIRE, VANDALISM, AND THEFT. ALL MATERIALS AND EQUIPMENT DAMAGED OR STOLEN SHALL BE REPAIRED OR REPLACED WITH EQUAL MATERIAL OR EQUIPMENT AT NO ADDITIONAL COST TO THE OWNER. PROTECT ALL EQUIPMENT, OUTLETS AND OPENINGS, AND ROOF PENETRATIONS WITH TEMPORARY PLUGS, CAPS AND COVERS. PROTECT WORK AND MATERIALS OF OTHER TRADES FROM DAMAGE THAT MIGHT BE CAUSED BY WORK OR WORKMEN UNDER THIS SECTION AND MAKE GOOD ON DAMAGE THUS CAUSED. DAMAGED MATERIALS SHALL BE REMOVED FROM THE SITE; DAMAGE CAUSED BY THE ELECTRICAL CONTRACTOR DURING INSTALLATION SHALL BE REPAIRED AND/OR REPLACED AT THIS CONTRACTOR'S EXPENSE TO THE COMPLETE SATISFACTION OF THE BUILDING OWNER.

1.19 SEISMIC RESTRAINT REQUIREMENTS:
PROVIDE SEISMIC RESTRAINTS AS REQUIRED IN ACCORDANCE WITH THE STATE BUILDING CODE. A REGISTERED PROFESSIONAL STRUCTURAL ENGINEER, LICENSED IN THE APPLICABLE STATE FOR THE PROJECT LOCATION, SHALL PREPARE THE SEISMIC RESTRAINT DESIGN AND CERTIFY THAT THE DESIGN IS IN COMPLIANCE WITH THE STATE BUILDING CODE REQUIREMENTS.

1.20 PROJECT CLOSEOUT:
A CERTIFICATE OF COMPLETION SHALL BE ISSUED BY THE ELECTRICAL CONTRACTOR INDICATING THAT THE INSTALLATION IS IN CONFORMANCE WITH THE CONSTRUCTION DOCUMENTS AND ALL APPLICABLE LOCAL, STATE AND FEDERAL STATUTES AND CODES. FINAL INSPECTION BY THE ENGINEER SHALL BE CONDUCTED AFTER RECEIPT OF THE CERTIFICATE OF COMPLETION. NO LIFE SAFETY DEFICIENCIES IN THE EGRESS OR EXIT LIGHTING SYSTEMS, FIRE ALARM SYSTEM, OR THE EMERGENCY POWER SYSTEM SHALL BE PRESENT WHEN REQUESTING FINAL INSPECTION. PREMATURE REQUESTS FOR FINAL INSPECTIONS THAT REQUIRE REINSPECTION OF DEFICIENT ITEMS WILL RESULT IN BACK CHARGES OF THE COSTS ASSOCIATED WITH THE REINSPECTION.

1.21 DRAWINGS AND SPECIFICATIONS:
THE DRAWINGS AND SPECIFICATIONS ARE COMPLEMENTARY EACH TO THE OTHER, AND ANY LABOR OR MATERIAL CALLED FOR BY EITHER, WHETHER OR NOT BY BOTH, OR NECESSARY FOR THE SUCCESSFUL OPERATION OF ANY COMPONENTS SHALL BE PROVIDED. BEFORE INSTALLING ANY WORK, VERIFY THAT IT DOES NOT INTERFERE WITH THE CLEARANCES REQUIRED FOR OTHER WORK. INSTALLED WORK WHICH INTERFERES WITH EXISTING NECESSARY SERVICES SHALL BE MODIFIED AS DIRECTED BY THE ARCHITECT, AT NO ADDITIONAL COST TO THE OWNER. BE FAMILIAR WITH THE DRAWINGS AND SPECIFICATIONS OF ALL OTHER TRADES TO PREVENT INTERFERENCES AND ASSURE COMPLETE COORDINATION. IF THERE ARE ANY DISCREPANCIES BETWEEN THE ELECTRICAL DRAWINGS AND SPECIFICATIONS REQUEST CLARIFICATION FROM THE ENGINEER PRIOR TO START AND OR CONTINUATION OF ANY WORK OR THE PROCUREMENT OF ANY MATERIALS AND EQUIPMENT.

PART 2 - PRODUCTS

2.1 FIRE ALARM SYSTEM:

1. GENERAL: PROVIDE AN ADDITION AND MODIFICATION TO THE EXISTING AUTOMATIC AND MANUAL, AUXILIARY CONNECTED FIRE ALARM SYSTEM, ACCORDING TO THE FOLLOWING SPECIFICATIONS TO BE WIRED, CONNECTED, TESTED AND LEFT IN FIRST CLASS OPERATING CONDITION. ALL EQUIPMENT SHALL BE UNDERWRITERS' LABORATORIES APPROVED FOR THE INTENDED USE AND SHALL MEET WITH THE APPROVAL OF THE LOCAL AUTHORITY. THE COMPLETE SYSTEM SHALL BE AS MANUFACTURED BY NOTIFIER. THE COMPLETE SYSTEM SHALL BE INSTALLED IN ACCORDANCE WITH APPLICABLE SECTIONS OF NFPA STANDARDS, SECTION 72, 101 LIFE SAFETY, STATE BUILDING CODES AND ALL LOCAL CODES AND REQUIREMENTS. ALL MODIFICATIONS TO CONTROL EQUIPMENT MUST BE WITH THE SAME BRAND OF EQUIPMENT AS THE EXISTING.
2. ALL DEVICES MUST BE U.L. LISTED AS COMPATIBLE WITH THE CONTROL EQUIPMENT. SUBMIT PROOF OF COMPATIBILITY WITH SHOP DRAWING SUBMITTAL.
3. REPLACE ANY EXISTING EQUIPMENT AND WIRING THAT IS NOT COMPATIBLE WITH THE EQUIPMENT THAT YOU PROVIDE OR THE MODIFICATIONS THAT YOU MAKE, WITHOUT ADDITIONAL COMPENSATION.
4. PROVIDE ADDITIONAL FIRE ALARM DEVICES AS SHOWN ON THE DRAWINGS. NEW DEVICES SHALL MATCH AND BE FULLY COMPATIBLE WITH EXISTING EQUIPMENT. THE MANUFACTURE OF THE NEW EQUIPMENT SHALL MATCH EXISTING. EXTENSION OF EXISTING FIRE ALARM SYSTEM SHALL INCLUDE INFRASTRUCTURE UPGRADES INCLUDING EXISTING FIRE ALARM CONTROL PANEL, ADDITIONAL POWER SUPPLIES, AMPLIFIERS, BATTERIES, SOFTWARE AND ALL OTHER ADDITIONAL COMPONENTS AS REQUIRED TO PROVIDE AND FULLY FUNCTIONAL FIRE ALARM SYSTEM. PRIOR TO SUBMITTING SHOP DRAWINGS THE ELECTRICAL CONTRACTOR AND/OR THEIR FIRE ALARM VENDOR SHALL FIELD VERIFY THAT THE EXISTING FIRE ALARM CONTROL PANEL IS EXPANDABLE AND IS NOT LIMITED TO SOFTWARE COMPATIBILITY, HARDWARE, AVAILABILITY OF PARTS, ETC. IF IT IS FOUND THAT THE EXISTING FIRE ALARM CONTROL PANEL CANNOT BE USED IN THE NEW DESIGN PER THE CONSTRUCTION DOCUMENTS, THEN THE ELECTRICAL CONTRACTOR SHALL PROVIDE SEPARATE PRICING FOR REPLACING THE CONTROL PANEL WITH A FULLY COMPATIBLE TYPE AND RE-PROGRAMING OF ALL EXISTING DEVICES AS REQUIRED.
5. AS IT IS NOT PRACTICAL TO ENUMERATE IN THESE SPECIFICATIONS ALL DETAILS OF FITTINGS AND ACCESSORY EQUIPMENT REQUIRED FOR PROPER OPERATION OF THE SYSTEM HEREIN DESCRIBED, IT IS UNDERSTOOD THAT THEY WILL BE SUPPLIED BY THE CONTRACTOR WITHOUT EXTRA COMPENSATION. PROVIDE ALL FITTINGS, TERMINATIONS, ETC., NEEDED FOR THE BEST PERFORMANCE POSSIBLE AT THE PRESENT STATE-OF-THE-ART.
6. WIRING: THE ELECTRICAL SUBCONTRACTOR SHALL PROVIDE IN ACCORDANCE WITH MANUFACTURER'S INSTRUCTIONS, ALL WIRING, CONDUIT AND OUTLET BOXES REQUIRED FOR INSTALLATION OF A COMPLETE SYSTEM AS DESCRIBED HEREIN AND AS SHOWN ON THE PLANS. PROVIDE ALL WIRING IN METALLIC RACEWAY. PROVIDE NO. 14 GAUGE, THWN, SOLID CONDUCTORS AND COLOR CODE AS REQUIRED.
7. TAG ALL WIRES AT ALL JUNCTION POINTS AND TEST FREE FROM GROUNDS OR CROSSES BETWEEN CONDUCTORS. CARRY THE WIRING SYSTEM THROUGH ALL EQUIPMENT. PROVIDE RED PAINTED TERMINAL CABINETS WITH HINGED LOCKABLE COVERS AT ALL JUNCTION POINTS. MAKE ALL CONDUCTOR SPLICES ON SCREW TYPE TERMINAL BLOCKS; WIRE NUTS SHALL NOT BE USED. PROPERLY LABEL ALL TERMINALS WITHIN TERMINAL CABINETS. MAKE FINAL CONNECTIONS BETWEEN CONTROL EQUIPMENT AND THE MANUFACTURER.
8. SUBMIT COMPLETE DOCUMENTATION FOR THE FIRE ALARM/LIFE SAFETY SYSTEM SHOWING THE MODEL NUMBER, TYPE, RATING, SIZE, STYLE, MANUFACTURER'S NAMES, AND MANUFACTURER'S CATALOG DATA SHEETS FOR ALL ITEMS TO ENSURE COMPLIANCE WITH THESE SPECIFICATIONS.
9. UPON CONTRACT BID APPROVAL, AND PRIOR TO START OF SYSTEM INSTALLATION, SUBMIT SHOP DRAWINGS TO AND OBTAIN WRITTEN APPROVAL FROM THE FIRE DEPARTMENT, PRIOR TO ORDERING FIRE ALARM EQUIPMENT. GENERAL REQUIREMENTS ARE AS FOLLOWS:
A. SYSTEM OPERATION DESCRIPTION: DETAILED DESCRIPTION FOR THIS PROJECT, INCLUDING METHOD OF OPERATION AND SUPERVISION OF EACH TYPE OF CIRCUIT AND SEQUENCE OF OPERATIONS FOR MANUALLY AND AUTOMATICALLY INITIATED SYSTEM INPUTS AND OUTPUTS. MANUFACTURER'S STANDARD DESCRIPTIONS FOR GENERIC SYSTEMS ARE NOT ACCEPTABLE.
B. DEVICE ADDRESS LIST: COORDINATE WITH FINAL SYSTEM PROGRAMMING.
C. SYSTEM RISER DIAGRAM WITH DEVICE ADDRESSES, CONDUIT SIZES, AND CABLE AND WIRE TYPES AND SIZES.
D. WIRING DIAGRAMS: POWER, SIGNAL, AND CONTROL WIRING. INCLUDE DIAGRAMS FOR EQUIPMENT AND FOR SYSTEM WITH ALL TERMINALS AND INTERCONNECTIONS IDENTIFIED. SHOW WIRING COLOR CODE.
E. BATTERIES: SIZE CALCULATIONS.
10. SUBMIT SHOP DRAWINGS TO AND OBTAIN WRITTEN APPROVAL FROM THE AUTHORITIES HAVING JURISDICTION, PRIOR TO ROUGHING. RESUBMIT IF REQUIRED TO MAKE CLARIFICATIONS OR REVISIONS TO OBTAIN APPROVAL. ON RECEIPT OF COMMENTS FROM AUTHORITIES HAVING JURISDICTION, SUBMIT THEM TO ENGINEER FOR REVIEW.
11. GUARANTEE AND FINAL TEST: GUARANTEE ALL NEW EQUIPMENT AND WIRING TO BE FREE FROM INHERENT MECHANICAL AND ELECTRICAL DEFECTS FOR A PERIOD OF ONE YEAR FROM THE DATE OF FINAL ACCEPTANCE. THE ELECTRICAL CONTRACTOR SHALL PROVIDE THE SERVICES OF THE BUILDING FIRE ALARM MAINTENANCE CONTRACTOR FOR TIE-IN OF NEW FIRE ALARM CIRCUITRY.
12. BEFORE THIS INSTALLATION SHALL BE CONSIDERED COMPLETE AND ACCEPTABLE TO THE AWARDING AUTHORITIES, A COMPLETE TEST ON THE SYSTEM SHALL BE PERFORMED AS FOLLOWS: THE ELECTRICAL CONTRACTOR'S JOB FOREMAN, IN THE PRESENCE OF A REPRESENTATIVE OF THE FIRE ALARM MAINTENANCE CONTRACTOR, FIRE ALARM MANUFACTURER AND A REPRESENTATIVE OF THE LOCAL FIRE DEPARTMENT, SHALL OPERATE EACH ALARM INITIATING DEVICE AND VERIFY ZONE ANNUNCIATION, AUDIBLE AND VISUAL SIGNALING AND PROPER OPERATION OF THE MASTER BOX. EACH CIRCUIT SHALL BE OPENED AT ITS MOST REMOTE POINT TO CHECK FOR THE CORRECTNESS OF THE SUPERVISORY CIRCUITRY. WHEN THE ABOVE TEST HAS BEEN COMPLETED TO THE SATISFACTION OF THE MANUFACTURER'S REPRESENTATIVE, THE ELECTRICAL SUBCONTRACTOR'S JOB FOREMAN, AND THE LOCAL FIRE DEPARTMENT, A LETTER WITNESSED AND CO-SIGNED BY ALL ATTESTING TO THE COMPLETION OF THIS TESTING SHALL BE FORWARDED TO THE ENGINEER. TEST TO INCLUDE BOTH NEW AND EXISTING WIRING AND EQUIPMENT.
13. DURING THE GUARANTEE PERIOD, 24 HOUR SERVICE (365 DAYS/YEAR) IS REQUIRED OF THE CONTRACTOR AND EQUIPMENT SUPPLIER.
14. QUARTERLY TESTING IS NOT PART OF THIS CONTRACT.
15. SERVICE CALLS RESULTING FROM ACTS OF VANDALISM, ACTS OF NATURE, OR ACTS WHICH ARE BEYOND THE CONTROL OF THE EQUIPMENT MANUFACTURER ARE EXCLUDED UNDER THE GUARANTEE AND SHALL BE CONSIDERED A BILLABLE CALL.

2.2 WIRE AND CABLE:
BRANCH WIRING SHALL BE TYPE THHN/THWN OR XHHW, MINIMUM OF #12 AWG SOLID COPPER WITH CONDUCTIVITY OF NOT LESS THAN 98% OF THE ANSI STANDARD FOR ANNEALED COPPER, UL LISTED FOR BUILDING WIRE 90 DEGREES CELSIUS. WET OR DRY LOCATIONS RATED FOR 600V SERVICE. MC AND FAMC CABLING CAN BE USED WHERE CONCEALED. CONDUCTORS LARGER THAN #10 SHALL BE STRANDED. COLOR CODING SHALL BE CONSISTENT THROUGHOUT. SERVICE FEEDER WIRING MAY BE PROVIDED AS ALUMINUM. ALUMINUM FEEDERS SHALL BE SIZED TO PROVIDE THE SAME AMPERE RATING FOR THE COPPER FEEDERS INDICATED.

2.3 CONDUIT:
ELECTRIC METALLIC TUBING SHALL BE ELECTRO-GALVANIZED SHERARDIZED STEEL. WHERE EXPOSED, ALL WIRING SHALL BE INSTALLED IN CONDUIT. ALL ROUTING OF CONDUIT SHALL BE RUN PERPENDICULAR TO BUILDING WALLS. ALL ELECTRIC METALLIC TUBING SHALL BE UTILIZED WITH STEEL COMPRESSION TYPE FITTINGS. CONDUIT SHALL BE SUPPORTED FROM BUILDING STRUCTURE; AND SHALL BE INDEPENDENT OF DUCTS, PIPES, CEILING AND THEIR SUPPORTING MEMBERS.

2.4 WIRING DEVICES:
1. RECEPTACLES:
A. DUPLEX RECEPTACLES SHALL BE SPECIFICATION GRADE GROUNDING TYPE, RATED 20 AMPERES, 125 VOLTS. RECEPTACLES SHALL BE BACK AND SIDE WIRED WITH SCREW TYPE TERMINALS HAVING SUITABLE CONDUCTOR RELEASE ARRANGEMENT. GFCI RECEPTACLES SHALL BE SPECIFICATION GRADE 20 AMPERES, 125 VOLTS.
B. COLOR OF RECEPTACLES SHALL BE AS SELECTED BY ARCHITECT.

2.5 OUTLET BOXES:
PROVIDE OUTLET BOXES AS REQUIRED FOR ALL ELECTRICAL DEVICES AND EQUIPMENT. MINIMUM SIZE OF BOXES SHALL BE 4", 1-1/4" DEEP. ALL OUTLET BOXES SHALL BE GALVANIZED STEEL.

2.6 PULL BOXES, JUNCTION BOXES AND WIREWAYS:
A. PULL BOXES SHALL BE OF CODE GAUGE GALVANIZED STEEL WITH SCREW COVERS TO MATCH. PULL BOXES AND WIREWAYS SHALL BE AS SHOWN ON CONTRACT DRAWINGS AND/OR AS REQUIRED BY THE NATIONAL ELECTRICAL CODE AND/OR JOB CONDITIONS, WITH STEEL BARRIERS SEPARATING SYSTEMS.
B. WIREWAYS SHALL BE OF CODE GAUGE STEEL, BAKED ENAMEL MANUFACTURED STANDARD SECTIONS AND STEEL FITTINGS, WITH COMBINATION HINGED AND SCREW COVERS.
C. CONDUCTORS PASSING THROUGH PULL BOXES AND WIREWAYS SHALL BE IDENTIFIED TO INDICATE THEIR ORIGIN AND TERMINATION. PROVIDE NAMEPLATES FOR ALL PULL BOXES.
D. WEATHERPROOF JUNCTION BOXES INSTALLED IN GRADE SHALL BE POLYMER CONCRETE WITH GASKETED COVER. MINIMUM 6"x8"

2.7 THERMAL SWITCHES:
A. THERMAL SWITCHES SHALL BE NEMA TYPE 1 TOGGLE SWITCH FOR NORMAL DUTY WITH THERMAL OVERLOAD RELAY.
B. SWITCH ENCLOSURES SHALL BE OF A TYPE APPROVED FOR THE LOCATION AND ATMOSPHERE IN WHICH IT IS MOUNTED.
C. THERMAL SWITCHES SHALL BE INSTALLED WHERE CALLED FOR OR WHERE REQUIRED BY CODE.
D. THERMAL SWITCHES SHALL BE PROVIDED WITH PILOT WHERE CALLED FOR ON THE DRAWINGS.

2.8 CIRCUIT BREAKERS FOR EXISTING PANELBOARDS:
A. CIRCUIT BREAKERS SHALL BE EQUAL TO THE EXISTING CIRCUIT BREAKERS AND OF THE SAME MANUFACTURER AS THE EXISTING PANELBOARDS IN WHICH THEY ARE TO BE INSTALLED.
B. PROVIDE UPDATED TYPEWRITTEN CIRCUIT DIRECTORY CARDS INDICATING AREAS AND DEVICES SERVED BY EACH CIRCUIT IN ALL EXISTING PANELBOARDS PANELS AFFECTED BY THE WORK OF THIS PROJECT.

2.9 TELECOMMUNICATION OUTLETS:
FURNISH AND INSTALL TELECOMMUNICATION OUTLETS, BOXES, AND CONDUIT FOR ALL TELECOMMUNICATION OUTLET LOCATIONS INDICATED ON THE DRAWINGS, PROVIDE BACK BOXES, CONDUIT, PULLSTRINGS, ETC. AS PER DRAWINGS.

2.10 DISCONNECT SWITCHES:
A. THE ELECTRICAL CONTRACTOR SHALL FURNISH AND INSTALL DISCONNECTING MEANS AS REQUIRED BY THE NATIONAL ELECTRICAL CODE FOR ALL MOTORS.
B. MANUAL MOTOR STARTERS SHALL HAVE QUICK MAKE, QUICK BREAK TOGGLE MECHANISMS WITH ALLOWANCE FOR UP TO 10% FIELD ADJUSTMENT TO NOMINAL OVERLOAD HEATER VALUES.
C. DISCONNECT SWITCHES SHALL BE FUSED OR UNFUSED AS SHOWN ON THE DRAWINGS, OR AS REQUIRED, NEMA TYPE HD SAFETY SWITCHES FOR HEAVY DUTY, WITH INTERLOCKING COVER, SIDE OPERATED WITH PROVISIONS FOR PADLOCKING THE SWITCH HANDLE IN THE OFF POSITION.
D. ALL MOTOR ISOLATING SWITCHES INDICATED ON THE DRAWINGS SHALL BE RATED IN HORSEPOWER AND SHALL BE RATED FOR THE VOLTAGE OF THE MOTOR AND SHALL BE FURNISHED AND INSTALLED AT THE MOTOR LOCATION WHETHER OR NOT THE MOTOR IS WITHIN SIGHT OF THE MOTOR FEEDER DISCONNECTING MEANS.
E. DISCONNECT SWITCH ENCLOSURES SHALL BE OF THE PROPER NEMA TYPE FOR THE INTENDED LOCATION AS DEFINED BY NEMA AND SHALL BE PHOSPHATE COATED OR EQUIVALENT CODE GAUGE GALVANIZED SHEET STEEL WITH USAFI NO. 24 DARK GRAY BAKED ENAMEL FINISH.
F. FUSES SHALL BE CLASS RK-5 SIZED PER DRAWING AND NAMEPLATE REQUIREMENTS.
G. INSTALL REJECTION CLIPS TO PROHIBIT INSTALLATION OF OTHER THAN CURRENT LIMITING FUSES.
H. DISCONNECT SWITCHES SHALL BEAR THE UNDERWRITERS' LABORATORIES LABEL AND BE MANUFACTURED BY GENERAL ELECTRIC.

PART 3 - EXECUTION

3.1 GENERAL:
A. ALL INTERRUPTIONS AND SHUTDOWNS OF EXISTING ELECTRICAL SYSTEMS AND SERVICES SHALL BE AS SHORT AS POSSIBLE AND AT TIME AND DURATION APPROVED BY THE OWNER AND THE ENGINEER. THE ELECTRICAL CONTRACTOR SHALL INCLUDE ALL PREMIUM TIME ASSOCIATED WITH THE SYSTEM AND SERVICE INTERRUPTIONS AND SHUTDOWNS.

3.2 CLEANING, ADJUSTING, AND TESTING:
A. AT THE COMPLETION OF THE WORK, ALL PARTS OF THE INSTALLATION SHALL BE THOROUGHLY CLEANED. ALL DEVICES, EQUIPMENT, CONDUITS, AND FITTINGS SHALL BE COMPLETELY CLEANED OF GREASE, METAL CUTTINGS, DIRT WHICH MAY HAVE ACCUMULATED DURING CONSTRUCTION, AND PROTECTION COVERS.
B. ANY DISCOLORATION OR DAMAGE TO PARTS OF THE BUILDING, ITS FINISH OR FURNISHINGS DUE TO FAILING TO PROPERLY CLEAN THE ELECTRICAL SYSTEM SHALL BE REPAIRED BY THE ELECTRICAL CONTRACTOR WITHOUT COST TO THE OWNER.
C. THE ELECTRICAL CONTRACTOR SHALL TEST ALL WORK AND EQUIPMENT AS DIRECTED BY THE ARCHITECT AND AS REQUIRED BY AUTHORITIES HAVING JURISDICTION, FURNISH ALL EQUIPMENT, NECESSARY PERSONNEL AND THE ELECTRICAL POWER.
D. THE ENTIRE INSTALLATION SHALL BE TESTED FOR SHORTS, GROUNDS AND OPEN CIRCUITS AND ALL DEFECTS SHALL BE CORRECTED BEFORE ACCEPTANCE OF HIS WORK.
E. ALL WORK SHALL BE DEMONSTRATED TO BE IN PROPER OPERATING CONDITION TO THE COMPLETE SATISFACTION OF THE ARCHITECT AND OWNER.

3.3 EQUIPMENT CONNECTIONS:
THE ELECTRICAL CONTRACTOR SHALL PROVIDE ALL CONNECTIONS TO ALL EQUIPMENT REQUIRING ELECTRICAL SERVICE, INCLUDING POWER CABLES, BRANCH CIRCUIT EXTENSIONS, FIRE ALARM CABLES, MOTORS, CONTROLLERS, LIGHTING FIXTURES AND ALL OTHER EQUIPMENT AND SYSTEMS SPECIFIED OR SHOWN ON THE DRAWINGS.

3.4 GROUNDING AND BONDING:
PROVIDE GROUNDING AND BONDING METHODS IN ACCORDANCE WITH NEC CODE ARTICLE 250 AND LOCAL UTILITY COMPANY REGULATIONS.

3.5 CONDUIT WORK:
1. ALL WIRING SHALL BE INSTALLED IN HEAVY WALL GALVANIZED RIGID STEEL CONDUIT UNLESS OTHERWISE NOTED BELOW AND RUN CONCEALED EXCEPT AS INDICATED ON THE DRAWINGS.
2. BRANCH CIRCUIT WIRING IN HUNG CEILINGS, FURRED SPACES OR EXPOSED AND NOT SUBJECT TO PHYSICAL DAMAGE MAY BE INSTALLED IN ELECTRICAL METALLIC TUBING.
3. PANELBOARD FEEDERS MAY BE RUN IN ELECTRICAL METALLIC TUBING WHERE NOT SUBJECT TO PHYSICAL DAMAGE.
4. ALL EXPOSED CONDUIT WHERE INSTALLED EXPOSED BELOW THE 8' LEVEL AND SUBJECT TO PHYSICAL DAMAGE SHALL BE RIGID STEEL CONDUIT.
5. TYPE MC CABLE MAY BE USED WHERE REQUIRED FOR "FISHING" INTO EXISTING WALL AND CEILING CAVITIES. PATIENT CARE AREAS OF HEALTHCARE OCCUPANCIES SHALL UTILIZED TYPE HCF MC CABLE FOR SAME EXISTING WALL AND CEILING CONDITIONS.
6. CONDUIT EXTENSIONS IN METAL PARTITIONS MAY BE MADE WITH FLEXIBLE METAL CONDUIT, WITH GROUNDING CONDUCTOR.
7. CONNECTIONS TO PORTABLE AND PERMANENTLY MOUNTED MOTORIZED EQUIPMENT AND MOTORS, AS WELL AS THE EQUIPMENT HOUSING, SHALL BE MADE WITH APPROVED LIQUID TIGHT FLEXIBLE METAL CONDUIT.
8. FLEXIBLE CONNECTIONS SHALL BE A MAXIMUM OF 18" LONG AND WITH GROUNDING CONDUCTOR.
9. FLEXIBLE CONNECTIONS SHALL BE USED PRIOR TO ATTACHMENT TO EQUIPMENT HOUSINGS.
10. CONDUIT ENDS SHALL BE CUT SQUARE, THREADED AND REAMED TO REMOVE BURRS AND SHARP EDGES.
11. TURNS, WHEREVER REQUIRED IN EXPOSED CONDUIT RUNS SHALL BE MADE BY THE USE OF FACTORY-MADE BENDS, OR FIELD MADE BENDS.
12. CONDULETS, OR IN THE EVENT OF A MULTIPLICITY OF CONDUITS MAKING THE SAME TURN, A STEEL JUNCTION BOX WITH A REMOVABLE STEEL COVER MAY BE USED.
13. OFFSETS AND BENDS FOR CHANGES IN ELEVATION OF EXPOSED CONDUIT RUNS SHALL BE MADE AT WALLS OR BEAMS AND NOT IN OPEN SPACES BETWEEN WALLS OR BEAMS.
14. CONDUITS SHALL BE ROUTED SO AS NOT TO INTERFERE WITH THE OPERATION OF MAINTENANCE OF ANY EQUIPMENT.
15. THE ENTIRE JOB SHALL BE DONE IN A NEAT AND WORKMANLIKE MANNER.
16. STEEL SUPPORTS OR RACKS SHALL BE GALVANIZED STEEL CHANNEL AND FITTINGS, UNISTRUT, KINDORF, HUSKY PRODUCTS COMPANY, OR EQUAL.
17. ALL CONDUIT WORK SHALL BE CAREFULLY CLEANED AND DRIED INSIDE BEFORE THE INSTALLATION OF CONDUCTORS.
18. WIRE SHALL NOT BE PULLED INTO CONDUIT SYSTEM UNTIL BUILDING IS COMPLETED.
19. PLUG CONDUIT ENDS TO EXCLUDE DUST, MOISTURE, PLASTER OR MORTAR WHILE BUILDING IS UNDER CONSTRUCTION.
20. NO LUBRICANTS OR CLEANING AGENTS WHICH MIGHT HAVE A DELETERIOUS EFFECTS ON CONDUCTOR COVERINGS SHALL BE USED FOR DRAWING CONDUCTORS INTO RACEWAYS.
21. THE NUMBER AND SIZE OF CONDUITS AND WIRE SHALL BE FURNISHED AND INSTALLED AS INDICATED BY THE DRAWINGS.
22. CONDUITS SHALL BE ROUTED IN THE FIELD SO AS TO BE COORDINATED WITH THE BUILDING STRUCTURE.
23. CONCEALED CONDUIT SHALL BE AS SHORT AND DIRECT AS POSSIBLE.
24. EXPOSED CONDUIT SHALL BE RUN IN STRAIGHT LINES PARALLEL TO WALLS, BEAMS AND COLUMNS AND WITH RIGHT ANGLE BENDS AND STEEL THREADED CONDUIT FITTINGS.
25. CONDUITS PASSING THROUGH FLOORS, WALLS AND BEAMS SHALL BE OF SUCH SIZE, NUMBER AND IN SUCH LOCATIONS SO AS NOT TO IMPAIR THE STRENGTH OF THE CONSTRUCTION.
26. CONDUITS SHALL BE SUPPORTED AND SECURED BY CONDUIT SUPPORT DEVICES.
27. WHERE RIGID METAL CONDUIT IS THREADED IN THE FIELD, A STANDARD CONDUIT CUTTING DIE PROVIDING 3/4" TAPER PER FOOT SHALL BE EMPLOYED.
28. THREADLESS COUPLING SHALL NOT BE USED ON RIGID METAL CONDUIT EXCEPT WHERE SPECIFICALLY ALLOWED BY THE ARCHITECT.
29. RUNNING THREADS SHALL NOT BE USED ON RIGID METAL CONDUIT.
30. MINIMUM SIZE CONDUIT SHALL BE 3/4" NOMINAL TRADE SIZE.
31. A MINIMUM 3/16" DIAMETER TWISTED NYLON PLASTIC TYPE FISH CORD SHALL BE FURNISHED AND INSTALLED IN ALL EMPTY RACEWAYS.
32. PROVIDE A TAG ON EACH END OF FISH CORD INDICATING THE LOCATION OF THE OTHER END.

3.6 FIRE STOPPING:
1. ELECTRICAL INSTALLATIONS IN HOLLOW SPACES, VERTICAL SHAFTS AND VENTILATION OR AIR HANDLING DUCTS SHALL BE SO MADE THAT THE POSSIBLE SPREAD OF FIRE OR PRODUCTS OF COMBUSTION WILL NOT BE SUBSTANTIALLY INCREASED.
2. OPENINGS AROUND ELECTRICAL PENETRATIONS THROUGH FIRE-RESISTANCE RATED WALLS, PARTITIONS, FLOORS OR CEILINGS SHALL BE FIRESTOPPED USING APPROVED METHODS TO MAINTAIN THE FIRE-RESISTANCE RATING.

3.7 IDENTIFICATION:
1. NAMEPLATES SHALL BE FURNISHED AND INSTALLED ON PANELBOARDS, TRANSFORMERS, JUNCTION BOXES, CABINETS FOR ALL SPECIAL PURPOSE SWITCHES, MOTOR DISCONNECT SWITCHES, AND OTHER CONTROLS FURNISHED UNDER THIS CONTRACT, TO DESIGNATE THE EQUIPMENT CONTROLLED AND FUNCTION.
2. NAMEPLATES SHALL BE LAMINATED WHITE BAKELITE WITH 1/4" HIGH BLACK RECESSED LETTERS.
3. NAMEPLATES SHALL BE SECURELY ATTACHED TO THE EQUIPMENT WITH GALVANIZED SCREWS OR RIVETS.
4. ADHESIVES OR CEMENTS WILL NOT BE PERMITTED.
5. ALL PULL BOXES AND JUNCTION BOXES SHALL BE IDENTIFIED AS TO SYSTEM AND FUNCTION BY MEANS OF BLACK FIBRE PEN.

RENOVATIONS TO THE
EXETER TOWN HALL
742 TEN ROD RD, EXETER, RI, 02822

BREWSTER THORNTON GROUP ARCHITECTS LLP
317 Iron Horse Way,
Suite 202
Providence, RI 02908

401.861.1600
brewsterthornton.com

ZAINO & ASSOCIATES
Zaino & Associates
183 PROVIDENCE-NEW LONDON TURNPIKE
NORTH STONINGTON, CT 06359

JOB NO.	DATE
2605	08/31/2026

ISSUE : BID DOCUMENTS

NO.	REVISION DESCRIPTION	DATE

SHEET TITLE
ELECTRICAL SPECIFICATIONS

SHEET
E700

PLUMBING FIXTURE CONNECTION SCHEDULE

FIXTURE TYPE	HOT WATER	COLD WATER	WASTE OR SAN	VENT
WATER CLOSET (TANK TYPE)	---	1/2"	4"	2"
LAVATORY	1/2"	1/2"	1 1/2"	1 1/2"
SINK	1/2"	1/2"	1 1/2"	1 1/2"

NOTE:
1 - SEE ARCHITECTURAL DRAWINGS FOR PLUMBING FIXTURE MOUNTING HEIGHTS.

PLUMBING GENERAL NOTES

PLUMBING GENERAL NOTES

1. THESE GENERAL NOTES ARE APPLICABLE TO ALL PLUMBING DRAWINGS.
2. DRAWINGS ARE DIAGRAMMATIC AND SHOW GENERAL INTENT OF WORK, SEE DETAILS, SCHEDULES AND SPECIFICATIONS FOR ADDITIONAL INFORMATION.
3. PLUMBING CONTRACTOR MUST REVIEW DRAWINGS OF THE OTHER TRADES AS PART OF THIS CONTRACT FOR ADDITIONAL WORK REQUIRED AND OR COORDINATION OF HIS WORK FOR OPERATIONS OR CONNECTIONS TO OTHER SYSTEMS.
4. THE PLUMBING CONTRACTOR IS RESPONSIBLE FOR PROVIDING AND INSTALLING ALL SERVICES TO HVAC EQUIPMENT INCLUDING BUT NOT LIMITED TO: GAS SUPPLY PIPING, CONDENSATE PIPING, COLD WATER SUPPLY PIPING, DRAINS, AND CONNECTIONS TO AIR HANDLING UNITS, FAN COIL UNITS, UNIT HEATERS, BOILERS, CHILLERS, ETC. ALSO, DEVICES REQUIRED INCLUDE BACKFLOW PREVENTERS, REGULATORS, UNIONS, TRAPS, AND SHUT-OFF VALVES REQUIRED FOR THIS EQUIPMENT. REFER TO HVAC DRAWINGS FOR ADDITIONAL INFORMATION AND COORDINATION.
5. THE PLUMBING CONTRACTOR SHALL PROVIDE PIPE EXPANSION JOINTS ON PIPING PASSING THRU ALL BUILDING EXPANSION JOINT LOCATIONS AS REQUIRED PER BUILDING CODES WHETHER OR NOT SHOWN ON DRAWINGS. REVIEW ARCHITECTURAL AND STRUCTURAL DRAWINGS FOR EXACT BUILDING EXPANSION JOINT LOCATIONS AND EXPANSION DIMENSIONS.
6. PLEASE NOTE THAT PLUMBING FIXTURES & COMPONENTS ARE TO BE APPROVED BY THE RHODE ISLAND PLUMBING BOARD. ALL ITEMS INCLUDED IN SUBMITTALS SHALL COMPLY WITH THIS REQUIREMENT. THE DESIGN TEAM IS NOT RESPONSIBLE FOR VERIFYING APPROVAL. ANY PRODUCT INCLUDED IN SUBMITTALS THAT DOES NOT COMPLY WITH THIS REQUIREMENT SHALL BE REPLACED WITH AN APPROVED PRODUCT AT THE PLUMBINGS CONTRACTOR'S EXPENSE.

PLUMBING PIPING LEGEND

	COLD WATER
	HOT WATER
	HOT WATER RECIRCULATION
85°F	TEPID HOT WATER 85° F
	WASTE, SANITARY OR SOIL
	WASTE, SANITARY, SOIL BURIED
ST	STORM
ST	STORM BURIED
	VENT
C	CONDENSATE WASTE
CPD	CONDENSATE WASTE - PUMP DISCHARGE
IW	INDIRECT WASTE
PD	PUMPED DISCHARGE
WS	WATER SERVICE
	DIRECTION OF FLOW
	PIPE DOWN
	PIPE DROP
	PIPE RISE
	PIPE ANCHOR
	PIPE GUIDE or SLEEVE
	PIPE EXPANSION FITTING (AT BLDG. EXP.JOINTS)
	VIBRATION ISOLATION FITTING
	PLUGGED OR CAPPED PIPE
	CLEANOUT
	FLOOR CLEANOUT

PLUMBING SYMBOL LEGEND

	THERMOMETER
	PRESSURE GAUGE
	WATER HAMMER ARRESTER
	STRAINER - 'Y' TYPE
	P-TRAP
	ROOF DRAIN
	FLOOR DRAIN
	FLOOR SINK
	SHOWER HEAD
TP	TRAP PRIMER
	UNION
	PETCOCK
	BALANCING VALVE
	BALL VALVE
	BUTTERFLY VALVE
	CURB GATE VALVE & BOX
	BACKWATER VALVE
	CHECK VALVE
	BACKFLOW PREVENTER (DOUBLE CHECK VALVE TYPE)
	BACKFLOW PREVENTER ASSEMBLY (RPD W/ DRAIN PIPING)
	THERMOSTATIC MIXING VALVE
	SOLENOID VALVE
	GATE VALVE
	GAS VALVE (BALL OR PLUG)
	OUTSIDE SCREW & YOKE (OS&Y) GATE VALVE
	VALVE IN PIPE DROP
	VALVE IN PIPE RISER
	ANGLE VALVE
	WALL HYDRANT (W.H.) or HOSE BIBB (H.B.)
	WATER PRESSURE REDUCING VALVE (* = PSI SETTING)
	GAS PRESSURE REGULATOR
	DRAIN
	TEMPERATURE & PRESSURE RELIEF VALVE (T&P)
M	WATER METER
GM	GAS METER
	CONNECT TO EXISTING
P	FIXTURE TYPE (REFER TO SPECIFICATIONS OR FIXTURE SCHEDULE)
	CIRCULATOR PUMP
	ADA ACCESSIBLE FIXTURE
	SQUARE FOOT
	OVERFLOW STORM - WALL OUTLET

ABBREVIATIONS

AFF	ABOVE FINISHED FLOOR
CW	COLD WATER
CO	CLEANOUT
CP	CIRCULATOR PUMP
CFH	CUBIC FEET PER HOUR
CTE	CONNECT TO EXISTING
COND	CONDENSATE
DF	DRINKING FOUNTAIN
EWC	ELECTRIC WATER COOLER
EWH	ELECTRIC WATER HEATER
EXP	EXPANSION TANK
GPM	GALLONS PER MINUTE
HW	HOT WATER
HB	HOSE BIBB
HC	HANDICAPPED ACCESSIBLE
HWR	HOT WATER RECIRCULATION
INV. ELEV.	INVERT ELEVATION
LAV	LAVATORY
NIC	NOT IN CONTRACT
PSI	POUNDS PER SQUARE INCH
SAN	SANITARY
T&P	TEMPERATURE & PRESSURE RELIEF VALVE
TP	TRAP PRIMER
TMV	THERMOSTATIC MIXING VALVE
TYP	TYPICAL
UR	URINAL
V	VENT
VIF	VERIFY IN FIELD
VTR	VENT THRU ROOF
W	WASTE
W&V	WASTE & VENT
WC	WATER CLOSET
WH	WALL HYDRANT
WHA	WATER HAMMER ARRESTOR

SHEET LIST

SHEET NUMBER	SHEET NAME
P000	PLUMBING LEGEND, SYMBOLS, SCHEDULE & DETAILS
PD100	PLUMBING DEMO PLAN
P100	PLUMBING FIRST FLOOR PLAN
P300	PLUMBING DETAILS
P400	PLUMBING SPECIFICATIONS

PLUMBING FIXTURE SCHEDULE

GENERAL NOTES: PIPE SIZES SHOWN ARE FOR SUPPLY AND DRAINAGE ONLY. PROVIDE SUPPLIES WITH 1/4 TURN BALL STOPS. SEMI-CAST "P" TRAPS, PLUMBING FIXTURE SUPPORTS AND NECESSARY FITTINGS TO MAKE FINAL CONNECTION. REFER TO SPECIFICATION FOR EQUIVALENTS AND ARCHITECTURAL DOCUMENTS FOR EXACT PLUMBING FIXTURE MOUNTING HEIGHTS.

TAG	FIXTURE TYPE	MOUNT	MFR	MODEL	DESCRIPTION	FAUCET, FLUSH VALVE AND TRIM	REMARKS
EWC	ELECTRIC WATER COOLER WITH BOTTLE FILLER	WALL	ELKAY	LZWS-LRPBM20K	BOTTLE FILLING STATION WITH BI-LEVEL INTEGRAL SWIRLFLO FOUNTAIN, FILTERED REFRIGERATED STAINLESS STEEL.	ELECTRONIC BOTTLE FILLER SENSOR W/ MECHANICAL FRONT BUBBLER BUTTON 8.0 GPH @ 50 DEGREES FAHRENHEIT WITH 80 DEGREE INLET WATER TEMPERATURE, 90 DEGREE FAHRENHET AMBIENT, 115V, 60Hz, 400 WATTS, 1/2" x 3/8" O.D. SWEAT ANGLE STOP, TUBULAR P-TRAP	
L1	LAVATORY	UNDER COUNTER	AMERICAN STANDARD	0614.300	"STUDIO7", 19-3/4"x 13-3/4", BOWL SIZE 18"x 12"x6-7/16" DEEP, VITREOUS CHINA, GLAZED UNDERSIDE, COLOR SHALL BE WHITE, COMPLETE WITH MOUNTING KIT AND TEMPLATE.	SUPPLY FITTING: AMERICAN STANDARD MODEL 7088205. 0.5 GP, PRESSURE COMPENSATING, VANDAL-RESISTANT MULTILAMINAR SPRAY, TOUCHLESS FAUCET, BATTERY OPERATED SENSOR ACTIVATED FAUCET WITH 605KTMV1070 THERMOSTATIC MIXING VALVE SET AT 110°F MAXIMUM. MCGUIRE 155WC GRID DRAIN ASSEMBLY.	INSULATE ALL EXPOSED WATER AND WASTE PIPING BELOW COUNTER WITH MCGUIRE PWD125WC.
SK1	GENERAL SINK SINGLE BOWL	UNDER COUNTER	AMERICAN STANDARD	0614.300	"STUDIO7", 19-3/4"x 13-3/4", BOWL SIZE 18"x 12"x6-7/16" DEEP, VITREOUS CHINA, GLAZED UNDERSIDE, COLOR SHALL BE WHITE, COMPLETE WITH MOUNTING KIT AND TEMPLATE.	FAUCET: AMERICAN STANDARD "SOUTHPORT" PULL-DOWN KITCHEN FAUCET WITH SELECTRONIC HANDS-FREE TECHNOLOGY, MAXIMUM FLOW RATE IS 1.8 GPM	
U1	URINAL	WALL	KOHLER	K-4991-ER	"BARDON"(OR APPROVED EQUAL) WHITE VITREOUS CHINA, 0.125 GALLON PER FLUSH, ULTRA HIGH EFFICIENCY URINAL. WALL HUNG, WASHOUT DESIGN, ELONGATED RIM, 3/4" TOP SPUD INLET, 2" I.P.S OUTLESS. WALL HANGERS AND BEEHIVE STRAINER	FLUSH VALVE: SLOAN, #8186-0.125, BATTERY POWERED, INFRARED SENSOR ACTIVATED, OVERRIDE BUTTON	J.R. SMITH, ADJUSTABLE URINAL FIXTURE SUPPORTS CARRIERS #9000 SERIES

PUMP SCHEDULE

TAG	LOCATION	MFR	MODEL	GPM	HEAD	HP	VOLTS	PHASE	REMARKS
RP-1	UTILITY ROOM	TACO	110 SERIES	5	7'	1/2	115	1	REFER TO DETAIL1 ON SHEET P3.0

PLUMBING WATER SPECIALTIES SCHEDULE

GENERAL NOTE: PROVIDE SUPPORTS, TRAPS, ADAPTERS, ETC. AND NECESSARY FITTINGS TO MAKE FINAL CONNECTION. REFER TO SPECIFICATION FOR MISCELLANEOUS DRAINAGE SPECIALTIES AND FOR DRAINAGE SPECIALTIES ITEMS EQUIVALENTS.

TAG	SPECIALTY ITEM	MFR	MODEL	DESCRIPTION	REMARKS
BV1	BALANCING VALVE	HAYS	2519	HAYS "MEASUREFLO", COMBINATION AUTOMATIC FLOW CONTROL VALVE AND BALL VALVE. SELF BALANCING, AND FULLY AUTOMATIC WITHOUT ADDITIONAL PIPING OR CONTROL MECHANISMS.	SET 3/4" VALVE FOR 0.5 GPM FLOW

ELECTRIC WATER HEATER SCHEDULE

TAG	STORAGE (GAL)	DEGREES RISE (F°)	RECOVERY (GPH)	NUMBER OF ELEMENTS	ELECTRICAL KW	V	PH	HZ	MODEL	REMARKS
EWH	30	100	18	2	4.5	208	1	60	AO SMITH DEL-30	PROVIDE DRAIN PAN W/ ID DN TO FLOOR DRAIN. WATER LEAK DETECTION ACCESSORY KIT #100345338 & AUTOMATIC SHUT-OFF SYSTEM. THE HEATING ELEMENT SHALL BE SELECTED BY THE WELL COMPANY DUE TO THE EXISTING BUILDING'S WATER CHEMISTRY.

RENOVATIONS TO THE
EXETER TOWN HALL
742 TEN ROD RD, EXETER, RI, 02822

BREWSTER THORNTON GROUP ARCHITECTS LLP
317 Iron Horse Way, Suite 202
Providence, RI 02908
401.861.1600
brewsterthornton.com

ZAINO & ASSOCIATES
Zaino & Associates
183 PROVIDENCE-NEW LONDON TURNPIKE
NORTH STONINGTON, CT 06359

JOB NO. 2605
DATE 08/31/2026

ISSUE : **BID DOCUMENTS**

NO.	REVISION DESCRIPTION	DATE

SHEET TITLE
PLUMBING LEGEND, SYMBOLS, SCHEDULE & DETAILS

SHEET
P000

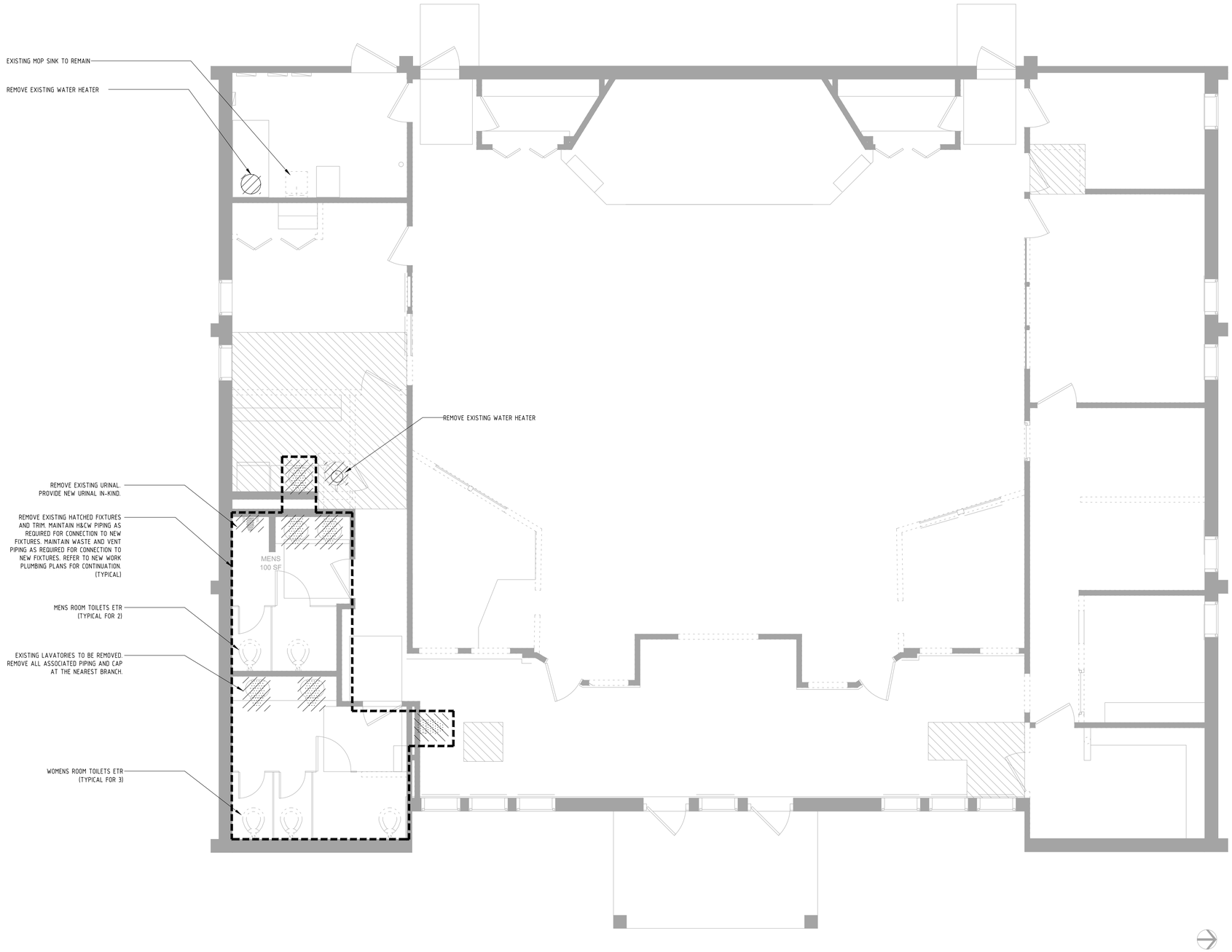

1 PLUMBING - DEMOLITION PLAN
SCALE: 1/4" = 1'-0"
0 4'-0" 8'-0" 12'-0"

RENOVATIONS TO THE EXETER TOWN HALL

742 TEN ROD RD, EXETER, RI, 02822

BREWSTER THORNTON GROUP ARCHITECTS LLP
317 Iron Horse Way,
Suite 202
Providence, RI 02908

401.861.1600
brewsterthornton.com

ZAINO & ASSOCIATES
Zaino & Associates
183 PROVIDENCE-NEW LONDON TURNPIKE
NORTH STONINGTON, CT 06359

JOB NO.	DATE
2605	08/31/2026

ISSUE : **BID DOCUMENTS**

NO.	REVISION DESCRIPTION	DATE

SHEET TITLE
PLUMBING DEMO PLAN

SHEET
PD100

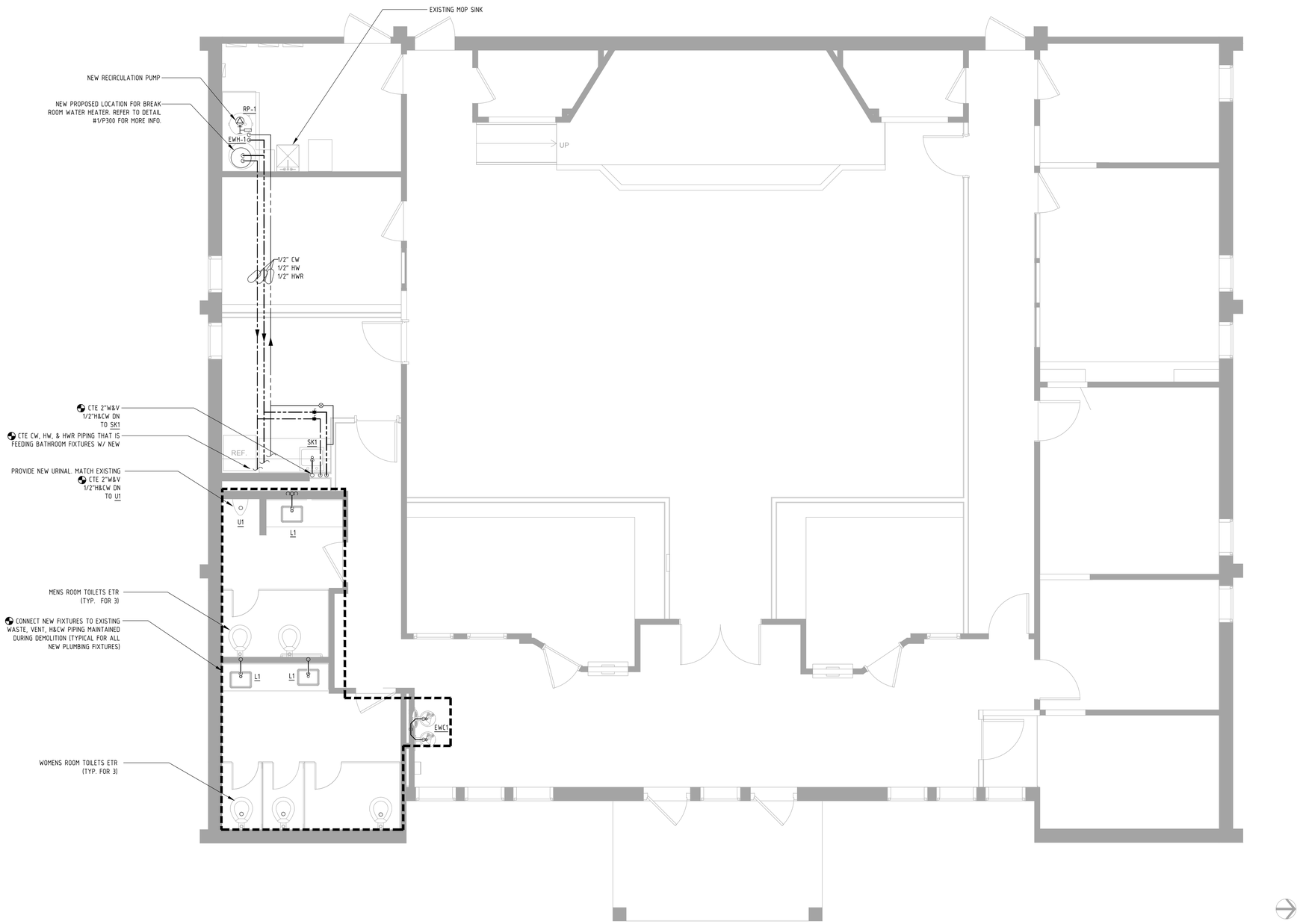

1 PLUMBING - FLOOR PLAN
SCALE: 1/4" = 1'-0"

0 4'-0" 8'-0" 12'-0"

RENOVATIONS TO THE
EXETER TOWN HALL
742 TEN ROD RD, EXETER, RI, 02822

BREWSTER THORNTON GROUP ARCHITECTS LLP
317 Iron Horse Way,
Suite 202
Providence, RI 02908

401.861.1600
brewsterthornton.com

ZAINO & ASSOCIATES
Zaino & Associates
183 PROVIDENCE-NEW LONDON TURNPIKE
NORTH STONINGTON, CT 06359

JOB NO.	DATE
2605	08/31/2026

ISSUE : BID DOCUMENTS

NO.	REVISION DESCRIPTION	DATE

SHEET TITLE
PLUMBING FIRST FLOOR PLAN

SHEET
P100

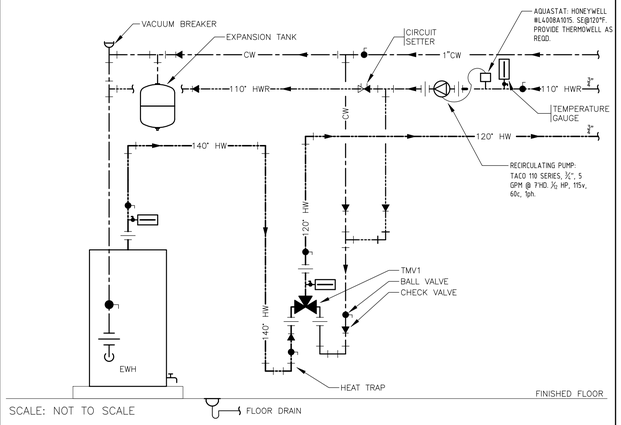

SCALE: NOT TO SCALE

1	DOMESTIC WATER HEATER DETAIL

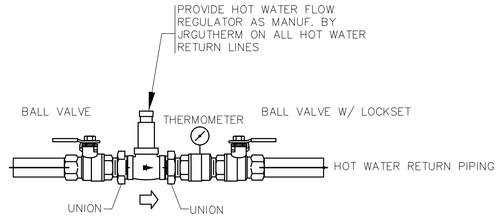

NOTE:
ALL FLOW REGULATORS INSTALLED IN THE SAME HOT WATER ZONE MUST BE SET TO THE SAME SCALE VALUE.

SCALE: NOT TO SCALE

2	HOT WATER RETURN BALANCING ASSEMBLY DETAIL

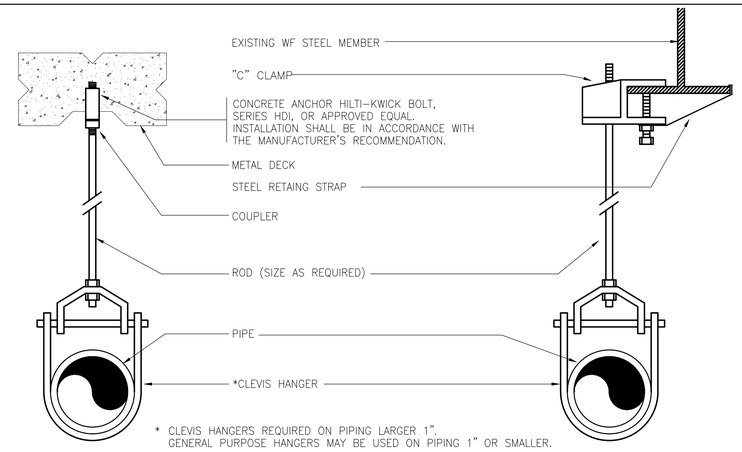

* CLEVIS HANGERS REQUIRED ON PIPING LARGER 1". GENERAL PURPOSE HANGERS MAY BE USED ON PIPING 1" OR SMALLER.

HANGER ROD SCHEDULE			
PIPE SIZE	ROD SIZE	PIPE SIZE	RODE SIZE
UP TO 2"	y" DIA.	4" THRU 5"	p" DIA.
2i" THRU 3"	i" DIA.	6" THRU 12"	f" DIA.

HANGER ROD SPACING												
PIPE SIZE	1"	1r"	1i"	2"	2i"	3"	4"	5"	6"	8"	10"	12"
MAX ALLOWABLE SPACING	7 FT.	8 FT.	9 FT.	10 FT.	11 FT.	12 FT.	14 FT.	16 FT.	17 FT.	19 FT.	22 FT.	13 FT.

SCALE: NOT TO SCALE

3	TYPICAL PIPE HANGER DETAIL

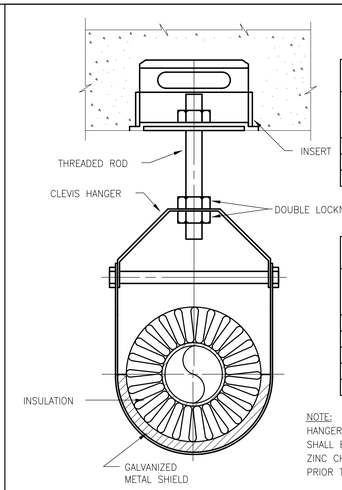

WITH INCOMPRESSIBLE INSULATING BLOCK AT HANGER		
PIPE DIAMETER	SHIELD LENGTH	SHIELD THICKNESS USSG
UP TO 3"	6"	18
4" TO 6"	8"	16
8" & LARGER	12"	16

WITHOUT INCOMPRESSIBLE INSULATING BLOCK AT HANGER		
PIPE DIAMETER	SHIELD LENGTH	SHIELD THICKNESS USSG
UP TO 3"	12"	18
4"	15"	16
5"	18"	16
6"	21"	16
8" & LARGER	24"	14

NOTE:
HANGER, ROD & INSERT SHALL BE DIPPED IN ZINC CHROMATE PRIMER PRIOR TO INSTALLATION

SCALE: NOT TO SCALE

4	TYPICAL INSULATED PIPE HANGER DETAIL

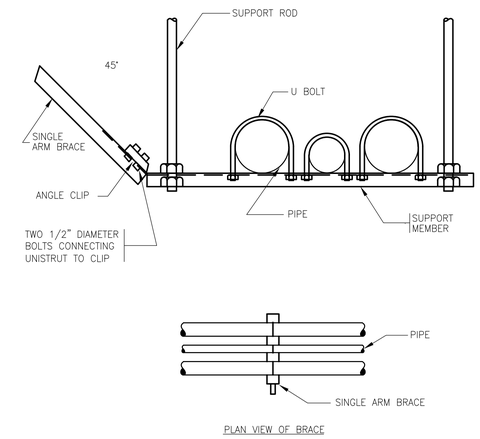

SCALE: NOT TO SCALE

5	SINGLE ARM BRACE FOR TRAPEZE HUNG PIPE DETAIL

RENOVATIONS TO THE
EXETER TOWN HALL
742 TEN ROD RD, EXETER, RI, 02822

BREWSTER THORNTON GROUP ARCHITECTS LLP
317 Iron Horse Way, Suite 202
Providence, RI 02908
401.861.1600
brewsterthornton.com

ZAINO & ASSOCIATES
Zaino & Associates
183 PROVIDENCE-NEW LONDON TURNPIKE
NORTH STONINGTON, CT 06359

JOB NO. 2605
DATE 08/31/2026
ISSUE : BID DOCUMENTS

NO.	REVISION DESCRIPTION	DATE

SHEET TITLE
PLUMBING DETAILS

SHEET
P300

GENERAL PLUMBING SPECIFICATIONS

PART I GENERAL

1.01 GENERAL CONDITIONS
THE APPLICABLE PROVISIONS OF THE GENERAL CONSTRUCTION SPECIFICATIONS SHALL APPLY TO THE FOLLOWING SPECIFICATIONS ARTICLES.
A. THE SPECIFICATIONS AND DRAWINGS ARE INTENDED TO SERVE JOINTLY AS A BASIS UPON WHICH THE CONTRACTOR SHALL SUBMIT A CONTRACT PRICE FOR THE MATERIAL AND LABOR PROVISIONS.
B. WHEN CONFLICTS OCCUR IN THE SPECIFICATIONS OR ON THE DRAWINGS, OR BETWEEN EITHER, THE ITEMS OF GREATER QUANTITY OR HIGHER COST SHALL BE PROVIDED.
C. THE CONTRACTOR SHALL PROVIDE ALL ITEMS OF LABOR AND MATERIALS NOT SPECIFICALLY INDICATED, BUT REQUIRED TO COMPLETE THE INTENDED INSTALLATION.
D. THE CONTRACTOR SHALL COORDINATE HIS WORK OR ADJUST SAME TO THAT OF OTHER TRADES, IN ORDER THAT CONFLICTS IN SPACE LOCATIONS DO NOT OCCUR.
E. THE WORK UNDER THIS CONTRACT SHALL BE PERFORMED SIMULTANEOUSLY WITH WORK OF OTHER TRADES, SO AS NOT TO DELAY THE OVERALL PROGRESS OF WORK.
F. THIS CONTRACTOR SHALL BE RESPONSIBLE FOR HIS WORK WITH ITS COMPLETION AND FINAL ACCEPTANCE AND SHALL REPLACE ANY IF SAME WHICH MAY BE DAMAGED, LOST OR STOLEN, WITHOUT ADDITIONAL COST TO THE OWNER.
G. ALL PLUMBING WORK SHALL BE PERFORMED BY A STATE LICENSED PLUMBER IN STRICT ACCORDANCE WITH AHJ, STATE & LOCAL CODES AND REQUIREMENTS.
H. PROVIDE ALL TRANSPORTATION, FREIGHT, LOADING AND UNLOADING AND PROVIDE ALL LABOR NECESSARY FOR ERECTING IN PLACE OF ALL MATERIAL AND EQUIPMENT SHOWN, SPECIFIED OR REQUIRED UNDER THIS DIVISION.

1.02 SCOPE OF WORK:
A. WITHOUT LIMITING GENERALITY, PROVIDE ALL LABOR, MATERIAL AND EQUIPMENT FOR A COMPLETE PLUMBING SYSTEM AS DESCRIBED BELOW:
1. SANITARY, WASTE AND VENT PIPING SYSTEM.
2. DOMESTIC WATER PIPING SYSTEM.
3. PLUMBING FIXTURES & TRIM.
4. PIPE INSULATION, SLEEVING AND FIRESTOPPING.
5. HANGERS, SUPPORTS, ACCESS PANELS DOORS.
6. FLUSHING, DISINFECTING, TESTING AND BALANCING.
7. PERMITS & FEES.
8. CONNECTIONS TO EXISTING PIPING OR EQUIPMENT.
9. TRENCHING, BACKFILLING, COMPACTING, CORING, CUTTING, AND PATCHING.
10. DOMESTIC WATER HEATING SYSTEM
11. MECHANICAL EQUIPMENT: DRAINS OR CONDENSATE

PART II PRODUCTS

2.01 PIPING
A. WATER PIPING ABOVE SLAB, SHALL BE TYPE "L" COPPER ASTM-B-88 WITH (95-5) TIN-ANTIMONY SOLDERED JOINTS & WROUGHT FITTINGS. WATER PIPING BELOW SLAB, SHALL BE TYPE "K" SOFT COPPER TUBING "ONE PIECE-WITHOUT JOINTS".
B. WASTE & VENT PIPING BELOW THE SLAB, SHALL BE STANDARD WEIGHT, BELL & SPIGOT CAST IRON, PIPE & FITTINGS.
C. WASTE AND VENT PIPING ABOVE THE SLAB, SHALL BE HUBLESS CAST IRON, PIPE & FITTINGS, ASTM-A-74, MANUFACTURED AND INSTALLED IN ACCORDANCE WITH C.I.S.P.I. STANDARD 301 AND PAMPHLET 100. JOINTS SHALL BE MADE WITH CLAMP RETAINER SLEEVE AND NEOPRENE GASKET. NO-HUB COUPLINGS SHALL BE HEAVY DUTY C.I. COUPLINGS AS MANUFACTURED BY CLAMP-ALL "125" SERIES OR HUSKY "SD 4000" SERIES.
D. PROVIDE ALL NECESSARY SUPPORTS, HANGERS, BRACES, ANCHORS, PADS AND ALL ELSE NECESSARY FOR THE ENTIRE INSTALLATION AND TO MEET THE INTENT OF THE SYSTEMS FOR PROPER OPERATION.
E. PIPE AND EQUIPMENT SUSPENSION SHALL BE SUCH AS TO PREVENT EXCESSIVE STRESS, EXCESSIVE VARIATION IN SUPPORTING FORCE, POSSIBLE RESONANCE WITH IMPOSED VIBRATION WHILE THE SYSTEM IS IN OPERATION CREEPING, SAGGING, BUCKLING, OR MISALIGNMENT.
F. SYSTEMS SHALL OPERATE UNDER ALL CONDITIONS OF LOAD WITHOUT ANY OBJECTIONAL SOUND OR VIBRATION.
G. OPENINGS IN EXTERIOR WALLS OR ROOF SHALL BE KEPT PROPERLY PLUGGED AND CAULKED AT ALL TIMES, EXCEPT WHEN BEING WORKED ON TO PRECLUDE THE POSSIBILITY OF FLOODING DUE TO STORM OR OTHER CAUSES. AFTER COMPLETION OF WORK, OPENINGS SHALL BE PERMANENTLY SEALED AND CAULKED IN A MANNER APPROVED BY THE ENGINEER OR ARCHITECT.
H. PROVIDE DI-ELECTRIC FITTINGS BETWEEN DISSIMILAR METALS.

2.02 BIDDING CONFLICTS:
A. IF CONFLICTS OCCUR WITHIN THESE SPECIFICATIONS OR ON THE DRAWINGS, OR EITHER, BETWEEN THE ITEMS OF GREATER QUANTITY OR HIGHER COST SHALL BE BID AND PROVIDED.

2.03 SMOKE AND FIRESTOPPING:
A. FIRESTOP ALL PENETRATIONS BETWEEN FLOORS & FIRE RATED WALLS WITH APPROVED FIRE STOPPING ASSEMBLIES AS MANUFACTURED BY 3M INDUSTRY, HILTI OR APPROVED EQUAL. THE ASSEMBLIES SHALL COMPLY WITH THE LATEST APPLICABLE REQUIREMENTS OF THE: BUILDING CODE, NFPA STANDARDS AND OWNERS INSURANCE COMPANY. PROPOSED APPLICABLE ASSEMBLIES SHALL BE UL LISTED AND SHALL BE PART OF THE PLUMBING EQUIPMENT SUBMITTAL.
B. ALL PIPING PASSING THROUGH FIRE-RATED WALLS, SLABS, FLOORS, ETC. SHALL HAVE STEEL SLEEVES EXTENDING 2" BEYOND SURROUNDING SURFACE. THE SPACE BETWEEN THE PIPES AND THE SLEEVES SHALL BE COMPLETELY PACKED WITH AN APPROVED FIRESTOPPING MATERIAL. AFTER FIRESTOPPING MATERIAL HAS BEEN INSTALLED AROUND PIPES, A 26" GAUGE SHEET METAL COLLAR SHALL BE SECURED AROUND THE PIPE TO INSURE TIGHTNESS.

2.04 INSULATION:
A. ALL INSULATION WHEN INSTALLED SHALL HAVE COMPOSITE FIRE AND SMOKE HAZARD RATINGS AS TESTED BY PROCEDURE ASTM-E-84, NFPA-255, AND UL-723, NOT EXCEEDING A FLAME SPREAD OF 25 AND SMOKE DEVELOPED OF 50 WHEN COMPARED WITH RED OAK AS 100, AS APPROVED UNDER NFPA AND NBFU PAMPHLET NO. 90A AND NO. 90B STANDARDS.
B. DOMESTIC WATER PIPING ABOVE GROUND SHALL BE INSULATED WITH FIBERGLASS INSULATION WITH FACTORY-APPLIED ALL-SERVICE JACKET SECURED IN PLACE WITH SELF SEALING LAPS. FITTINGS SHALL BE INSULATED WITH PREMOLDED PVC COVERS SECURED IN PLACE WITH STAINLESS STEEL TACKS. DOMESTIC WATER PIPING BELOW GROUND SHALL BE INSULATED WITH 1/2" THICK "ARMAFLEX" ELASTOMERIC UNICELLULAR SEAMLESS INSULATION.
C. PIPING INSULATION MATERIALS AS MANUFACTURED BY GUSTIN-BACON, JOHNS MANVILLE, OWENS-CORNING, KNAUF, OR CERTAIN TEED.
D. ABOVE GROUND PIPING: INSULATION THICKNESS:
1. DOMESTIC COLD WATER : 1" THICK
2. DOMESTIC HOT WATER & HOT WATER RETURN : 1-1/2" THICK

2.05 ACCESS PANELS:
A. FURNISH ALL ACCESS PANELS FOR WALLS AND CEILINGS. COORDINATE THE ACCESS PANEL LOCATION WITH GENERAL CONTRACTOR. PIPING SHALL BE LAID OUT IN SUCH A MANNER AS TO MINIMIZE THE NUMBER OF ACCESS PANELS REQUIRED. MILCOR PRODUCTS, VENTLOCK, KNAPP. MINIMUM SIZE: 8" X 8".
B. PROVIDE ACCESS PANELS FOR ALL CLEANOUTS, VALVES, AND OTHER CONCEALED ACCESSORIES REQUIRING ACCESS SUCH AS SHOCK ABSORBERS, CONTROL VALVES, PRESSURE REDUCERS, AIR ARRESTORS, ETC.

2.06 IDENTIFICATION, MARKING AND TAGGING:
A. EQUIPMENT IDENTIFICATION:
1. MANUFACTURER'S NAMEPLATES OR TRADEMARK SHALL BE PERMANENTLY AFFIXED TO ALL EQUIPMENT AND MATERIALS FURNISHED UNDER THIS DIVISION. MFG'S NAMEPLATES SHALL INCLUDE ALL PERTINENT DATA RELATIVE TO THE PIECE OF EQUIPMENT INCLUDING MODEL NUMBER, SERIAL NUMBER, AND OPERATING CHARACTERISTICS AS APPLICABLE.
2. SEPARATE EQUIPMENT IDENTIFICATION MARKERS SHALL IDENTIFY EACH ITEM OF EQUIPMENT WITH A PERMANENTLY ATTACHED MARKER INDICATING DESIGNATION AND/OR NUMBER CORRESPONDING TO DESIGN DOCUMENTS E.G. WH-1, WH-2, ETC.
3. MARKERS SHALL BE OF RIGID BLACK BAKELITE OR PHENOLIC CONSTRUCTION WITH WHITE ENGRAVED OR INCISED LETTERS.
4. LETTERING ON EQUIPMENT MARKERS SHALL BE OF ADEQUATE SIZE TO BE LEGIBLE FROM FLOOR LEVELS. MARKER LETTERING SHALL NO BE LESS THAN 1 INCH HIGH.
5. MOUNT EQUIPMENT IDENTIFICATION NAMEPLATES IN A CONSPICUOUS PLACE ON THE EQUIPMENT.
6. FOR EQUIPMENT MOUNTED ABOVE THE FLOOR LEVEL, MOUNT IDENTIFICATION NAMEPLATE SO THAT THEY CAN BE SEEN FROM FLOOR LEVEL.
7. ATTACH NAMEPLATES WITH RIVETS.

B. PIPING SYSTEM IDENTIFICATION:
1. PIPING SYSTEMS SHALL BE IDENTIFIED AS INDICATED BY COLOR HEREIN OR AS REQUIRED BY APPLICABLE CODES AND/OR OFFICIALS HAVING JURISDICTION.
2. PIPE MARKERS SHALL BE COLOR CODED ACCORDING TO "TABLE 2: CLASSIFICATION OF MATERIALS AND DESIGNATIONS TO COLORS" - ANSI A13.1-1981.
3. PIPE MARKERS SHALL INDICATE DIRECTION OF FLOW, SYSTEM, OPERATING PRESSURE AND TEMPERATURE.
4. PIPE MARKERS SHALL BE OF THE PRESSURE SENSITIVE TYPE AS MANUFACTURED BY THE SETON NAMEPLATE CORP. (F10-CODE)
5. PIPE MARKERS SHALL BE INSTALLED AT EVERY POINT OF ENTRY AND EXIT THROUGH FLOORS, WALLS, CEILINGS OR OTHER CONCEALMENT, ON EACH RISER, TAKE-OFF AND BRANCH AND AT EACH PIECE OF EQUIPMENT.
6. INSTALL PIPE MARKERS AT A DISTANCE OF NOT LESS THAN 25 FEET APART IN CONTINUOUS LENGTHS OF PIPE LINES AND ORIENTED SO THAT MARKERS ARE CLEARLY VISIBLE. WHEN PIPE LINES ARE LOCATED ABOVE THE NORMAL LINE OF VISION, THE MARKER SHALL BE PLACED BELOW THE HORIZONTAL CENTERLINE OF THE PIPE.
7. PROVIDE ANSI (ASME) SYSTEM INSULATION PIPE JACKET COLORS PER SYSTEM DESCRIPTION. COLOR CODE ALL PIPING SYSTEMS W/ LABELING.

C. VALVE IDENTIFICATION:
1. PROVIDE LAMINATED PLASTIC NAMEPLATES ON ALL VALVES INSTALLED UNDER DIVISION 15, EXCEPT STOP VALVES IN SUPPLIES TO FIXTURES. TAGS SHALL BE CONSTRUCTED OF 0.125 INCHES THICK MELAMINE PLASTIC CONFORMING TO FED. SPEC. L-P-387. SURFACE SHALL BE MATTE FINISH. ACCURATELY ALIGN LETTERING AND ENGRAVE INTO WHITE CORE. NAMEPLATES SHALL BE TO 2 INCHES ROUND OR HEXAGONAL. LETTERING SHALL BE MINIMUM OF 0.375 INCH HIGH NORMAL BLOCK LETTERING. KEY THE NAMEPLATES TO A CHART AND SCHEDULE FOR EACH SYSTEM UNDER GLASS AND PLACE WHERE DIRECTED IN MECHANICAL ROOM. FURNISH FOUR COPIES OF EACH CHART AND SCHEDULE. EACH INSCRIPTION SHALL IDENTIFY IT'S FUNCTION. ATTACH NAMEPLATES WITH "S" HOOKS AND CHAIN TO EACH VALVE. VALVE NAMEPLATES SHALL BE NUMBERED AND "KEYED" AS FOLLOWS:
   a. PLUMBING NAMEPLATES SHALL BE RED IN COLOR AND INDICATE:
      AA. "CW" COLD WATER
      BB. "HW" HOT WATER-INDICATE DESIGN TEMPERATURE OF WATER
      CC. "HWR" HOT WATER RETURN
   b. CHART AND SCHEDULE SHALL INDICATE THE FOLLOWING INFORMATION:
      AA. MANUFACTURER, TYPE, AND MODEL NUMBER
      BB. CAPACITY OR SIZE
      CC. SYSTEM IN WHICH IT IS INSTALLED
      DD. SYSTEM OR EQUIPMENT WHICH IT CONTROLS
      EE. LOCATION KEYED INTO VALVE NUMBER
   c. VALVE TAGS AND CHAIN SHALL BE SECURELY ATTACHED TO THE VALVE SO THAT NORMAL OPERATION OF THE VALVE OR TAMPERING WILL NOT ALLOW IT TO BE REMOVED.

2.07 SLEEVES, INSERTS AND ESCUTCHEONS:
J. PROVIDE SLEEVES FOR ALL WORK PASSING THROUGH FLOOR, WALL, AND CEILING CONSTRUCTION. MAINTAIN ALL RATINGS.
K. LOCATE AND PROVIDE SLEEVES AND INSERTS BEFORE THE FLOOR, WALL OR CEILING IS CONSTRUCTED. IF THIS CONTRACTOR DOES NOT COMPLY WITH THE ABOVE, HE SHALL BEAR ALL COSTS INCURRED FOR CUTTING AND PATCHING REQUIRED FOR THE INSTALLATION OF SLEEVES AND INSERTS. HOLES REQUIRED FOR SLEEVES IN EXISTING WALLS AND FLOORS, OR TO CONFORM TO THE ABOVE, SHALL BE SAW CUT OR CORE DRILLED. THIS CONTRACTOR SHALL PROVIDE ALL DRILLING REQUIRED FORTHE INSTALLATION OF HANGERS.
L. PIPE SLEEVES THROUGH OUTSIDE WALLS AND SLAB-ON-GRADE FLOOR SHALL BE SCHEDULE 80 BLACK STEEL PIPE WITH 150 LB. BLACK STEEL SLIP-ON WELDED FLANGES WELDED AT THE CENTER OF THE OUTSIDE. EXTEND SLEEVES 1/2 INCHES BEYOND EACH SIDE OF THE WALL. PACK THE SPACE BETWEEN SLEEVE AND PIPE WITH OAKUM TO WITHIN 2 INCHES OF EACH FACE OF THE WALL. PACK THE REMAINING SPACE AND MAKE WATERTIGHT WITH AN APPROVED WATERPROOF COMPOUND. (INSIDE FACE OF SLAB-ON-GRADE FLOOR.) FOR EXISTING WALL CONSTRUCTION, CENTER FLANGE WILL NOT BE REQUIRED.
M. PIPE SLEEVES THROUGH CONCRETE FLOORS OR INTERIOR MASONRY WALLS SHALL BE SCHEDULE 40 BLACK STEEL PIPE, SET FLUSH WITH FINISHED WALL OR CEILING SURFACES, BUT EXTENDING 2 INCHES ABOVE FINISHED FLOORS. PLASTIC, PVC, OR LIGHT METAL SLEEVES SHALL NOT BE INSTALLED.
N. E. PROVIDE INDIVIDUAL OR STRIP TYPE INSERTS PRESSED STEEL CONSTRUCTION WITH ACCOMMODATION FOR REMOVABLE NUTS AND THREADED RODS UP TO 3/4 INCH DIAMETER, PERMITTING LATERAL ADJUSTMENT. INDIVIDUAL INSERTS SHALL HAVE AN OPENING AT THE TOP TO ALLOW REINFORCING RODS TO 1/2 INCH DIAMETER TO BE PASSED THROUGH THE INSERT BODY AND SHALL BE SIMILAR TO FEE AND MASON MANUFACTURING COMPANY FIGURE 178. STRIP INSERTS SHALL HAVE ATTACHED RODS WITH HOODED ENDS TO ALLOW FASTENING TO REINFORCING RODS SHALL BE SIMILAR TO FEE AND MASON MANUFACTURING COMPANY.
O. WHERE PIPE MOTION DUE TO EXPANSION AND CONTRACTION WILL OCCUR, MAKE SLEEVES OF SUFFICIENT DIAMETER TO PERMIT FREE MOVEMENT OF PIPE. WHERELL SLEEVES PASS INSULATED PIPES, THE SLEEVES SHALL BE LARGE ENOUGH TO PASS THE PIPE AND THE INSULATION. CHECK FLOOR AND WALL CONSTRUCTION FINISHES TO DETERMINE PROPER LENGTH OF SLEEVES FOR VARIOUS LOCATIONS.
P. ESCUTCHEON PLATES SHALL BE PROVIDED FOR ALL EXPOSED UNINSULATED PIPES PASSING THROUGH WALLS, FLOORS, AND CEILINGS. PLATES SHALL BE NICKEL PLATED, OF THE SPLIT RING TYPE, OF SIZE TO MATCH THE PIPE. WHERE PLATES ARE PROVIDED FOR PIPES PASSING THROUGH SLEEVES WHICH EXTEND ABOVE THE FLOOR SURFACE, PROVIDE DEEP RECESSED PLATES TO CONCEAL PIPE SLEEVES.
Q. PACK THE SPACE BETWEEN SLEEVES AND STRUCTURE, AND SLEEVES AND PIPES PASSING THROUGH FIRE RATED INTERIOR WALLS, FLOORS, AND CEILINGS WITH AN APPROVED FIRE AND SMOKE PROOF PACKING MATERIAL. FIRE-STOPPING MATERIAL SHALL MAINTAIN ITS DIMENSIONS AND INTEGRITY WHILE PREVENTING THE PASSAGE OF FLAME, SMOKE, AND GASES UNDER CONDITIONS OF INSTALLATION AND USER WHEN EXPOSED TO THE ASTM E119 TIME-TEMPERATURE CURVE FOR A TIME PERIOD EQUIVALENT TO THE RATING OF THE ASSEMBLY PENETRATED. COTTON WASTE SHALL NOT IGNITE WHEN PLACED IN CONTACT WITH THE NON-FIRE SIDE DURING THE TEST. FIRE-STOPPING MATERIAL SHALL BE NON-COMBUSTIBLE AS DEFINED BY ASTM E136; AND IN ADDITION, FOR INSULATION MATERIALS, MELT POINT SHALL BE A MINIMUM OF 1700 DEGREES F. FOR 1-HOUR PROTECTION AND 1850 DEGREES F. FOR 2-HOUR PROTECTION.
R. FASTEN SLEEVES SECURELY IN FLOORS, WALLS, ETC. SO THAT THEY WILL NOT BECOME DISPLACED WHEN CONCRETE IS POURED OR WHEN CONSTRUCTION IS BUILT AROUND THEM. TAKE PRECAUTIONS TO PREVENT CONCRETE, PLASTER, OR OTHER MATERIALS BEING FORCED INTO THE SPACE BETWEEN PIPE AND SLEEVE DURING CONSTRUCTION.

PART III EXECUTION

3.01 WATER SYSTEM:
A. PIPING SHALL BE RUN PARALLEL WITH THE LINES OF THE BUILDING; WELL SUPPORTED FROM THE STRUCTURE: FREE FROM POCKETS AND SAGS: PITCHED TO DRAIN POINTS; AND INSTALLED WITH PIPE EXPANSION LOOPS, MECHANICAL EXPANSION JOINTS, PIPE GUIDES, OFFSETS AND ANCHORS TO ADEQUATELY PROVIDE FOR THERMAL EXPANSION.
B. ABOVE GROUND PIPING SHALL BE INSTALLED TO PROVIDE NOT LESS THAN 3/4" SPACING FROM FINISHED COVERING TO OTHER COVERING OR SURFACES OF OTHER CONSTRUCTION. SEPARATE BELOW GROUND H & CW PIPING THAT ARE TO BE INSTALLED IN THE SAME TRENCH, BY A MINIMUM OF 12". PIPE SHALL HAVE LONG TURN RADIUS TURNS WITHOUT KINKS. PIPING SHALL NOT MAKE CONTACT WITH OTHER PIPE, CONDUIT REINFORCING STEEL OR CONCRETE.
C. ALL PIPING SHALL BE PROTECTED FROM WATER HAMMER OR SHOCKS BY APPROVED WATER HAMMER ARRESTORS.
D. VALVES SHALL BE INSTALLED ON BRANCHES AND AT SINGLE FIXTURES WHEN TRIM DOES NOT INCLUDE STOPS. PROVIDE CHICAGO MODEL NO. 1018 HEAVY DUTY STOPS OR APPROVED EQUAL.
E. FINAL CONNECTIONS SHALL BE MADE TO ALL EQUIPMENT WITH PROPER CONNECTION WHETHER FURNISHED BY THIS CONTRACTOR OR BY OTHERS. THIS CONTRACTOR SHALL PROVIDE FAUCETS, TRAPS, STRAINERS AND SUPPLIES.

3.02 DRAINAGE SYSTEMS:
A. THE INTERIOR DRAINAGE SYSTEMS SHALL BE CONSTRUCTED USING MATERIALS AND METHODS AS SPECIFIED AND/OR INDICATED.
B. PROVIDE PROPERLY TRAPPED AND VENTED WASTE CONNECTION TO FIXTURES, FLOOR DRAINS, AND SPECIAL EQUIPMENT.
C. DRAIN PIPING SHALL BE UNIFORMLY PITCHED TO CONFORM WITH STATE AND LOCAL PLUMBING CODE.
D. NOT USED
E. TRAPS OF MATERIAL AND DESIGN APPROVED BY THE LATEST ADDITION OF THE APPLICABLE PLUMBING CODE SHALL BE FURNISHED & INSTALLED BY THE PLUMBING CONTRACTOR FOR ALL EQUIPMENT AND APPLIANCES. ALL TRAPS SHALL HAVE THE BOTTOM CLEANOUTS WHERE ACCESS CAN BE PROVIDED.
F. CAREFULLY INSPECT FOR DAMAGED MATERIALS. RUN PIPING AS SHOWN ON THE DRAWINGS, MAKE CHANGES IN DIRECTION WITH LONG SWEEP 1/8 OR 1/16 BENDS. CONNECTIONS TO STACKS MAY BE WITH SANITARY T-FITTINGS.

3.03 TESTING & BALANCING:
A. ALL PLUMBING SYSTEMS LOCATED IN THE SCOPE OF THE PROJECT SHALL BE TESTED & REPAIRED BY THIS CONTRACTOR. TESTING OF ALL SYSTEMS SHALL BE DONE AT THE EXPENSE OF THE PLUMBING CONTRACTOR, AND WITH EQUIPMENT FURNISHED BY HIM. TESTING SHALL BE IN THE PRESENCE OF DULY AUTHORIZED INSPECTORS AND THE OWNER'S REPRESENTATIVE WITH 48-HOUR NOTICE GIVEN TO THESE AUTHORITIES. ALL SYSTEMS SHALL BE REPAIRED AND RETESTED UNTIL REQUIREMENTS ARE MET WITHOUT ADDITIONAL EXPENSE TO THE OWNER.
B. NEW WATER, WASTE & VENT PIPING SHALL BE HYDROSTATICALLY TESTED IN ACCORDANCE WITH LOCAL PLBG INSPECTORS REQUIREMENTS AND AS PER THE STATE PLUMBING CODE.
C. NEW SANITARY WASTE & VENT PIPING SHALL BE TESTED IN ACCORDANCE WITH LOCAL PLBG INSPECTORS REQUIREMENTS AND AS PER THE STATE PLUMBING CODE.

3.04 STERILIZATION:
A. THE NEW PORTIONS OF THE POTABLE WATER DISTRIBUTION SYSTEM SHALL BE THOROUGHLY FLUSHED CLEAN, DISINFECTED AND TESTED AS PER THE STATE PLUMBING CODE.

3.05 COMPLETION:
A. PROVIDE PROPERLY EXECUTED CERTIFICATE OF INSPECTION FROM THE LOCAL PLUMBING INSPECTORS OFFICE.
B. VERIFY THAT PROJECT RECORD DOCUMENTS ARE COMPLETE AS SPECIFIED UNDER SUBMITTALS AND RECORD DOCUMENTS.

3.06 SCAFFOLDING, RIGGING AND HOISTING:
A. PROVIDE SCAFFOLDING, RIGGING, HOISTING AND SERVICES NECESSARY FOR DELIVERY, ERECTION AND INSTALLATION OF MATERIAL, EQUIPMENT AND APPARATUS FURNISHED UNDER THIS DIVISION. REMOVE SAME FROM PREMISES UPON COMPLETION OF WORK.

3.07 CUTTING AND PATCHING
A. PROVIDE ALL CUTTING AND PATCHING NECESSARY TO INSTALL THE WORK SPECIFIED IN THIS DIVISION. PATCHING SHALL MATCH ADJACENT SURFACES.
B. SAW CUT, CHANNEL, CHASE, AND CORE-DRILL FLOORS, WALLS, PARTITIONS, CEILINGS, AND OTHER SURFACES NECESSARY FOR PLUMBING INSTALLATION. PERFORM CUTTING BY SKILLED MECHANICS OF THE TRADE INVOLVED. REPAIR CUT SURFACES TO MATCH ADJACENT SURFACES.
C. FIRESTOP ALL PENETRATIONS BETWEEN FLOORS & FIRE RATED WALLS.
D. NO STRUCTURAL MEMBERS SHALL BE CUT WITHOUT THE APPROVAL OF THE ENGINEER, & ALL SUCH CUTTING SHALL BE ACCOMPLISHED IN A MANNER DIRECTED BY THE ENGINEER.

3.08 APPROVALS AND SUBSTITUTIONS
A. IT IS THE INTENT OF THESE SPECIFICATIONS THAT WHEREVER A MANUFACTURER IS SPECIFIED AND SUBSTITUTIONS ARE ALLOWED, THEY SHALL CONFORM IN ALL RESPECTS TO THE SPECIFIED ITEM CRITERIA AS DELINEATED, SPECIFIED EQUIPMENT SHALL BE INTERPRETED AS MINIMUM PERFORMANCE REQUIREMENTS.
B. SUBSTITUTED EQUIPMENT WHERE PERMITTED MUST CONFORM TO SPACE REQUIREMENTS. ANY SUBSTITUTED EQUIPMENT THAT CANNOT MEET SPACE REQUIREMENTS, WHETHER APPROVED OR NOT, SHALL BE REPLACED AT THE CONTRACTOR' S EXPENSE. ANY MODIFICATION OF RELATED SYSTEMS OR ADDITIONAL COSTS THAT RESULT FROM SUBSTITUTED EQUIPMENT SHALL BE BORNE BY THIS CONTRACTOR.
C. IT SHALL BE MANDATORY FOR THIS CONTRACTOR TO SUBMIT HIS BID PRICE BASED ON SPECIFIED MANUFACTURERS OR SUPPLIERS OF MATERIALS OR SERVICES. IF THE CONTRACTOR DESIRES TO SUBSTITUTE OTHER THAN SPECIFIED, HE SHALL SUBMIT SEPARATE PRICES FOR EACH OF THESE ITEMS FOR ADDITIONS OR DEDUCTIONS TO THE BID PRICE, FOR ACCEPTANCE OR REJECTION AT THE TIME BIDS ARE DUE. SHOULD THESE SUBSTITUTIONS BE REJECTED, THE CONTRACTOR SHALL BE OBLIGED TO PROVIDE SPECIFIED MATERIALS AND SERVICES.

3.09 CODES, PERMITS, TESTING AND INSPECTIONS
A. ALL WORK SHALL MEET OR EXCEED LATEST REQUIREMENTS OF THE STATE BUILDING & PLUMBING CODES, LOCAL CODES AND AUTHORITIES EXERCISING JURISDICTION OVER THE WORK OF THIS PROJECT. DURING THE PROGRESS OF THE WORK IT SHALL BE SUBJECT TO THE INSPECTION OF THE OWNER, CITY AGENCIES, UTILITY INSPECTORS,AND TO SUCH OTHER INSPECTORS AS MAY HAVE JURISDICTION AT THE CONTRACTOR'S COST.
B. ANY PORTION OF WORK WHICH IS NOT SUBJECT TO THE APPROVAL OF AN AUTHORITY HAVING JURISDICTION SHALL BE PROVIDED IN ACCORDANCE WITH NATIONAL FIRE PROTECTION ASSOCIATION REQUIREMENTS.
C. COMPLY WITH APPLICABLE UTILITY COMPANY RULES AND REGULATIONS.
D. THE CONTRACTOR SHALL SECURE REQUIRED PERMITS, INSPECTION & TEST CERTIFICATES, TRANSMIT SAME TO THE OWNER AT THE COMPLETION OF THE WORK. PAY ALL ASSOCIATED FEES.
E. AT COMPLETION OF THE WORK, CONTRACTOR SHALL SUBMIT TO THE OWNER'S REPRESENTATIVE IN WRITING A STATEMENT STATING: (1) THAT THE WORK IS COMPLETE; (2) THAT THE ENTIRE INSTALLATION IS IN ACCORDANCE WITH THE DRAWINGS AND SPECIFICATION; (3) THAT PRELIMINARY TESTS HAVE BEEN MADE; AND (4) THAT THE WORK IS READY FOR FINAL INSPECTION AND TEST.
F. A FINAL INSPECTION OF THE INSTALLATION TO DETERMINE COMPLIANCE WITH THE DRAWING AND SPECIFICATIONS WILL BE MADE BY THE OWNER'S REPRESENTATIVE. WORK WILL BE CHECKED FOR QUALITY OF MATERIALS, QUALITY OF WORKMANSHIP, PROPER INSTALLATION AND FINISHED APPEARANCE. THIS CONTRACTOR SHALL PROVIDE THE SERVICES OF THE PROJECT FOREMAN FOR INSPECTION PURPOSES. THE FOREMAN SHALL REMOVE AND REINSTALL ACCESS PANELS, CEILING TILES, ETC., AS REQUIRED TO FACILITATE ANY INSPECTIONS REQUIRED BY THE OWNER'S REPRESENTATIVE.
G. THE CONTRACTOR SHALL ARRANGE AND CONDUCT OPERATING TESTS ON ALL EQUIPMENT IN THE PRESENCE OF THE OWNER'S REPRESENTATIVE. THE COMPONENT PARTS OF SYSTEMS AND THE VARIOUS SYSTEMS SHALL BE DEMONSTRATED TO OPERATE IN ACCORDANCE WITH THE REQUIREMENTS AND INTENT OF THIS SPECIFICATION. ANY NON-COMPLYING OR DEFECTIVE MATERIALS OR WORKMANSHIP DISCLOSED AS A RESULT OF THE INSPECTION AND TESTS SHALL BE CORRECTED PROMPTLY BY THE CONTRACTOR, AND THE TESTS REPEATED AS OFTEN AS NECESSARY UNTIL APPROVED AND ACCEPTED BY THE OWNER'S REPRESENTATIVE.

3.10 SHOP DRAWINGS AND EQUIPMENT SUBMISSIONS
A. LAYOUTS AND CERTIFIED EQUIPMENT MANUFACTURER'S DATA SHALL BE SUBMITTED FOR APPROVAL PRIOR TO FABRICATION, ERECTION OR PURCHASE.
B. SHOP DRAWINGS SHALL INCLUDE BUT NOT NECESSARILY LIMITED TO: PLUMBING FIXTURES AND TRIM, PIPING, PIPE INSULATION, SHOCK ARRESTORS, VALVES, TRAP PRIMERS, WATER HEATERS, CLEANOUTS AND FLOOR DRAINS.
C. CERTIFICATION SHALL BE SUBMITTED BY THE CONTRACTOR ATTESTING TO THE FACT THAT SPECIFIED PERFORMANCE CRITERIA ARE MET BY ALL EQUIPMENT.

3.11 CLEANING AND TESTS
A. THE CONTRACTOR SHALL KEEP THE BUILDING AND SITE CLEAN FROM HIS OWN RUBBISH AND/OR WASTE MATERIALS AND, UPON COMPLETION OF HIS CONTRACT, SHALL LEAVE THE BUILDING, SITE AND INSTALLATION IN A CLEAN CONDITION COMPLETELY ACCEPTABLE TO THE OWNER'S REPRESENTATIVE.
B. CLEAN AND TEST ALL NEW AND EXISTING PLUMBING SYSTEMS, FIXTURES AND EQUIPMENT.
C. IF ANY PART OF A SYSTEM SHOULD BE STOPPED BY ANY FOREIGN MATTER AFTER BEING PLACED IN OPERATION, CLEAN AND RECONNECT SYSTEM.

3.12 OPERATING AND MAINTENANCE INSTRUCTIONS
A. AFTER FINAL TESTS AND ADJUSTMENTS FULLY INSTRUCT OWNER'S OPERATING PERSONNEL IN ALL DETAILS OF OPERATIONS FOR EQUIPMENT INSTALLED. A SIGNED RECEIPT WHICH SHALL BE OBTAINED FROM THE OPERATOR SHALL BE CONSTRUED AS EVIDENCE THAT INSTRUCTIONS WERE SATISFACTORY.
B. FURNISH THREE (3) COPIES OF WRITTEN DESCRIPTIONS OF ALL SYSTEMS COVERING ALL MANUAL OPERATING PROCEDURES, AUTOMATIC CONTROL DESCRIPTIONS AND AUTOMATIC TEMPERATURE & PRESSURE SETTINGS WRITTEN DESCRIPTIONS SHALL INCLUDE LUBRICATION SCHEDULES, PARTS LIST, PERFORMANCE SERVICES FOR EQUIPMENT, FILTER SIZE/QUANTITY SCHEDULE, ETC. WHEN MANUFACTURER STANDARD INSTRUCTIONS ARE UTILIZED, THEY SHALL BE CLEARLY MARKED AS TO INDICATED APPLICABILITY.
C. AT THE END OF THE PROJECT, THE PLUMBING CONTRACTOR SHALL FURNISH THE FOLLOWING: APPROVED OPERATING INSTRUCTIONS FOR EACH PRINCIPAL ITEM OF EQUIPMENT FOR THE USE OF THE OPERATION AND MAINTENANCE PERSONNEL. THE OPERATING INSTRUCTIONS SHALL INCLUDE WIRING DIAGRAMS, CONTROL DIAGRAMS, AND CONTROL SEQUENCE FOR EACH PRINCIPAL ITEM OF EQUIPMENT. OPERATING INSTRUCTIONS SHALL BE PRINTED OR ENGRAVED, AND SHALL BE FRAMED UNDER GLASS OR IN AN APPROVED LAMINATED PLASTIC & POSTED WHERE DIRECTED BY ENGINEER. OPERATING INSTRUCTIONS SHALL BE ATTACHED TO OR POSTED ADJACENT TO EACH PRINCIPAL ITEM OF EQUIPMENT. INCLUDE START UP, PROPER ADJUSTMENT, OPERATING, LUBRICATION, SHUT-DOWN, SAFETY-PRECAUTIONS, PROCEDURE IN THE EVENT OF EQUIPMENT FAILURE, AND OTHER ITEMS OF EQUIPMENT. OPERATING INSTRUCTIONS EXPOSED TO THE WEATHER SHALL BE WEATHER PROTECTED. OPERATING INSTRUCTIONS SHALL NOT FADE WHEN EXPOSED TO SUNLIGHT & SHALL BE SECURED TO PREVENT REMOVAL OR PEELING.
D. PROVIDE VALVE TAGS & CHARTS.

3.13 GUARANTEES
A. EXCEPT AS OTHERWISE SPECIFIED, ALL WORK SHALL BE GUARANTEED TO BE FREE FROM LEAKS OR OTHER DEFECTS RESULTING FROM THE USE OF INFERIOR MATERIALS, EQUIPMENT, OR WORKMANSHIP. ALL DEFECTIVE MATERIAL OR WORKMANSHIP AS WELL AS DAMAGES TO THE WORK OF ALL TRADES RESULTING FROM SAME SHALL BE REPLACED AT THE CONTRACTOR'S EXPENSE.
B. THE GUARANTEE PERIOD SHALL BE FOR ONE (1) YEAR FORM THE DATE OF ACCEPTANCE, WHICH SHALL BE THE DATE OF FINAL PAYMENT OR THE DATE OF FORMAL NOTICE OF ACCEPTANCE, WHICHEVER IS EARLIER.
C. CERTIFICATION SHALL BE SUBMITTED BY THE CONTRACTOR ATTESTING TO THE FACT THAT SPECIFIED PERFORMANCE CRITERIA ARE MET BY ALL EQUIPMENT.
D. IF, WITHIN ANY GUARANTEE PERIOD, REPAIRS OR CHANGES TO GUARANTEED WORK ARE REQUIRED AS A RESULT OF THE USE OF DEFECTIVE MATERIALS OR EQUIPMENT, INFERIOR WORKMANSHIP OR WORK THAT IS NOT IN ACCORDANCE WITH THE TERMS OF THE CONTRACT, AND UPON RECEIPT OF NOTICE FROM THE OWNER, THE FOLLOWING SHALL BE DONE WITHOUT EXPENSE TO THE OWNER:
   a. REPAIR ALL DAMAGE TO THE BUILDING OR SITE/EQUIPMENT OR CONTENTS THEREOF WHICH IS THE RESULT OF THE USE OF DEFECTIVE MATERIALS OR EQUIPMENT OR INFERIOR WORKMANSHIP, OR OF WORK NOT IN ACCORDANCE WITH THE TERMS OF THE CONTRACT.
   b. MAKE GOOD ANY WORK OR MATERIALS, OR THE EQUIPMENT AND CONTENTS OF SAID BUILDING OR SITE DISTURBED IN FULFILLING ANY SUCH GUARANTEE.
E. IN FULFILLING THE REQUIREMENTS OF THE CONTRACT OR OF ANY GUARANTEE EMBRACED IN OR REQUIRED THEREBY, ANY WORK GUARANTEED UNDER ANOTHER CONTRACT IS DISTURBED, RESTORE SUCH DISTURBED WORK TO ORIGINAL CONDITION AND GUARANTEE SUCH RESTORED WORK TO THE SAME EXTENT AS IT WAS GUARANTEED UNDER SUCH OTHER CONTRACT.
F. IF UPON FAILURE TO PROCEED PROMPTLY AFTER NOTICE TO COMPLY WITH THE TERMS OF THE GUARANTEE, THE OWNER MAY HAVE THE DEFECTS CORRECTED AND CONTRACTOR AND HIS SURETY SHALL BE LIABLE FOR ALL EXPENSES INCURRED.

3.14 AS-BUILT DRAWINGS
A. AS BUILT DRAWINGS, INDICATING ALL MODIFICATIONS RELATIVE TO CONTRACT DRAWINGS DURING THE PROGRESS OF THE WORK, SHALL MAINTAIN AN ACCURATE RECORD OF ALL CHANGES MADE IN THE PLUMBING SYSTEMS. THE AS BUILT DRAWINGS SHALL INCLUDE CHANGES IN MANUFACTURERS (WITH MODEL NUMBERS AND TRADE NAMES). MATERIALS, SIZES, LOCATIONS AND HOOK-UP POINTS. AS-BUILTS SHALL BE GIVEN TO OWNER'S REPRESENTATIVE AT COMPLETION OF WORK-ONE (1) REPRODUCIBLE (SEPIA) AND THREE (3) COPIES OF PRINTS.

3.15 ELECTRICAL WORK
A. ELECTRICAL COMPONENTS OF PLUMBING EQUIPMENT AND SYSTEMS, SUCH AS MOTORS, FACTORY MOUNTED STARTERS, FACTORY MOUNTED DISCONNECTS AND CONTROL EQUIPMENT SHALL BE PROVIDED BY THE PLUMBING CONTRACTOR.
B. TEMPERATURE CONTROL EQUIPMENT, INCLUDING AQUASTATS, ETC. SHALL BE FURNISHED BY THE PLUMBING CONTRACTOR. TEMPERATURE CONTROL WIRING NOT SPECIFICALLY SHOWN ON ELECTRICAL DRAWINGS SHALL BE PROVIDED BY THE PLUMBING CONTRACTOR. AUTOMATIC CONTROL CONTRACTOR SHALL OBTAIN HIS REQUIRED POWER FROM NEAREST SPARE BREAKERS, PROVIDE POWER TRANSFORMATION IF REQUIRED, AND ALL SYSTEM LOW VOLTAGE AND/OR LINE VOLTAGE WIRING.
C. RELAYS AND WIRING REQUIRED FOR INTERLOCKING SYSTEMS SHALL BE FURNISHED AND INSTALLED BY THE PLUMBING CONTRACTOR. POWER WIRING SHALL BE PROVIDED BY THE ELECTRICAL CONTRACTOR.

3.16 SAFETY
A. COMPLY WITH ALL OF THE SAFETY REQUIREMENTS OF OSHA THROUGHOUT THE ENTIRE CONSTRUCTION PERIOD OF THE PROJECT.
B. FURNISH, PLACE AND MAINTAIN PROPER GUARDS FOR PREVENTION OF ACCIDENTS AND ANY OTHER NECESSARY CONSTRUCTION REQUIRED TO SECURE SAFETY OF LIFE AND/OR PROPERTY.

3.17 REMOVAL AND ALTERATIONS
A. THE CONTRACTOR SHALL REMOVE, RELOCATE, REPLACE, ADJUST, ADAPT AND MODIFY EXISTING FIXTURES AND/OR SYSTEMS AS REQUIRED BY THE DRAWINGS OR SPECIFICATIONS AND AS MAY BE REQUIRED WHEN SUCH WORK IS UNCOVERED AND FOUND TO INTERFERE WITH THE COMPLETION OF WORK IN THIS CONTRACT OR OTHER CONTRACT WORK. REMOVED ITEMS SHALL BE STORED IN A PLACE DESIGNATED BY THE OWNER. IF HOWEVER, THE OWNER DOES NOT DESIRE TO RETAIN POSSESSION OF REMOVED ITEMS, THEY SHALL BECOME THE PROPERTY OF THE CONTRACTOR WHO SHALL REMOVE THEM FROM THE PROJECT SITE AND DISPOSE OF THEM IN A LEGAL MANNER.

RENOVATIONS TO THE
EXETER TOWN HALL
742 TEN ROD RD, EXETER, RI, 02822

BREWSTER THORNTON GROUP ARCHITECTS LLP
317 Iron Horse Way, Suite 202
Providence, RI 02908
401.861.1600
brewsterthornton.com

ZAINO & ASSOCIATES
Zaino & Associates
183 PROVIDENCE-NEW LONDON TURNPIKE
NORTH STONINGTON, CT 06359

JOB NO. 2605
DATE 08/31/2026
ISSUE : BID DOCUMENTS

NO.	REVISION DESCRIPTION	DATE

SHEET TITLE
PLUMBING SPECIFICATIONS

SHEET
P400